BROILMASTER®
PREMIUM GRILLS

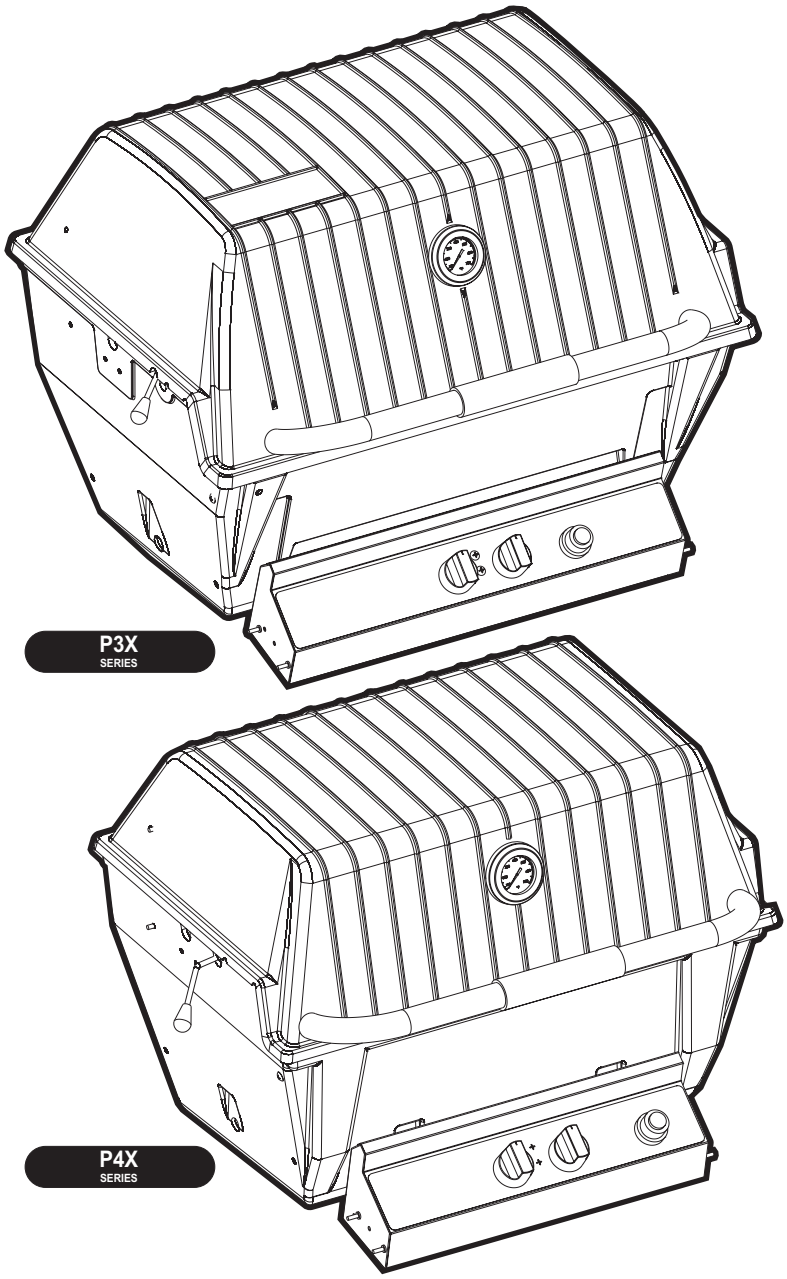

P3X(N)-3, P3SX(N)-3, P3XF(N)-3, P4X(N)-2, P4XF(N)-2
P3X AND P4X GRILL HEAD

GAS-FIRED
C UL US
LISTED

IMPORTANT INFORMATION

IMPORTANT

This manual should be read thoroughly by the installer and by anyone who will use or maintain the grill.

Installer - Write the model number, serial number, and date of installation in the manual. If available, attach a copy of the receipt. Leave this manual with the grill owner.

Grill Owner - Read and retain this manual. It contains instructions on using and maintaining your grill, plus information on ordering replacements parts. Attach a copy of your receipt to this manual. Your receipt established the proof of purchase required for warranty replacement parts.

⚠ WARNING

Follow the instruction in this manual for proper installation and maintenance of the grill. Improper installation, adjustment, alteration, service or maintenance can cause injury or property damage. For assistance or additional information consult a qualified installer, service agency or the gas supplier.

⚠ DANGER: FOR YOUR SAFETY

IF YOU SMELL GAS:

1. **Extinguish any open flame.**
2. **Shut off gas to the appliance.**
3. **Open the grill lid.**
4. **If odor continues, keep away from the appliance call your gas supplier or your fire department.**

⚠ WARNING: FOR YOUR SAFETY

1. **Do not store or use gasoline or other flammable vapors or liquids in the vicinity of this or any appliance.**
2. **Only the LP tank connected for use shall be placed in the vicinity of this grill.**

⚠ CAUTION:

Parts may have sharp edges. Wear leather work gloves and handle parts carefully during unpacking, assembly and installation.

⚠ WARNING

For LP grills, use propane cylinders equipped with an Overfill Protection Device (OPD). An overfilled or improperly filled propane cylinder can be dangerous.

Thank you for purchasing a Premium Gas Grill.

Broilmaster takes pride in its reputation as the The Most Durable Grill Known to Man.

From its thick aluminum casting to its massive cooking grids, your Broilmaster is built to last. In fact we still make replacement parts for Broilmaster grills built more than 30 years ago.

Visit www.broilmaster.com and click on the Hall of Fame to see a sampling of our long-time customers. We hope you enjoy years of great meals prepared on your Broilmaster. And we hope to add your photo to the Hall of Fame one day.

Thank You!

Broilmaster is a registered trademark of

Empire Comfort Systems, Inc.
918 Freeburg Ave.
Belleville, Illinois 62220
Telephone 800-851-3153

TABLE OF CONTENTS

You have chosen the finest grill for your outdoor cooking pleasure.
Please take time to read this entire manual before assembling your Premium Broilmaster gas grill.

ASSEMBLY INSTRUCTIONS **5**
P3X PARTS DIAGRAM **6**
P4X PARTS DIAGRAM **7**
GRILL HEAD HARDWARE PACK **8**
UNPACK AND REMOVE LID **9**
INSERT BURNER HOLD-DOWN BOLT **10**
WIND DEFLECTOR PLACEMENT **11**
INSERT CONTROL PANEL **12**
ATTACH IGNITER WIRE **13**
INSTALL BURNER ASSEMBLY **14**
CONNECT IGNITER LEADS **15**
KNOB AND BATTERY PLACEMENT **16**
INSTALL LID STOP **17**
INSTALL HANDLE **18**
REINSTALL LID **19**
INSTALL RACKS **20-23**
PROPANE GAS GRILLS **24-27**
NATURAL GAS GRILLS **28-29**
COMPLETED ASSEMBLY **30**
OWNER'S MANUAL FOR P3X AND P4X GRILLS **31-40**
- OPERATION - PROPANE AND NATURAL GAS GRILLS **31-32**
- MAINTENANCE **33**
- TROUBLESHOOTING **34**
- IMPORTANT SAFETY INFORMATION **35-36**
- COOKING TIPS **37**
- WARRANTY TERMS **38**
- MASTER PARTS DISTRIBUTOR LIST **39**
- GRILL MAINTENANCE HISTORY **40**

ASSEMBLY INSTRUCTIONS

Before You Begin

Compare the parts in the box to the parts list provided in this manual. If any are missing, contact your Broilmaster dealer before beginning assembly.

All Broilmaster grills require some assembly. For the best results, follow the step-by-step instructions.

For natural gas grills and for permanently mounted LP grills, have your gas supplier run service to the desired location first.

If you purchased an accessory with your Broilmaster, follow the instructions provided. Assemble your base options before assembling your Broilmaster grill head. Refer to the Broilmaster Cart, Base, and Post instructions provided with each accessory for assembly, installations, and mounting procedures.

CAUTION:
Parts may have sharp edges. For your safety wear leather work gloves and handle parts carefully during unpacking and assembly.

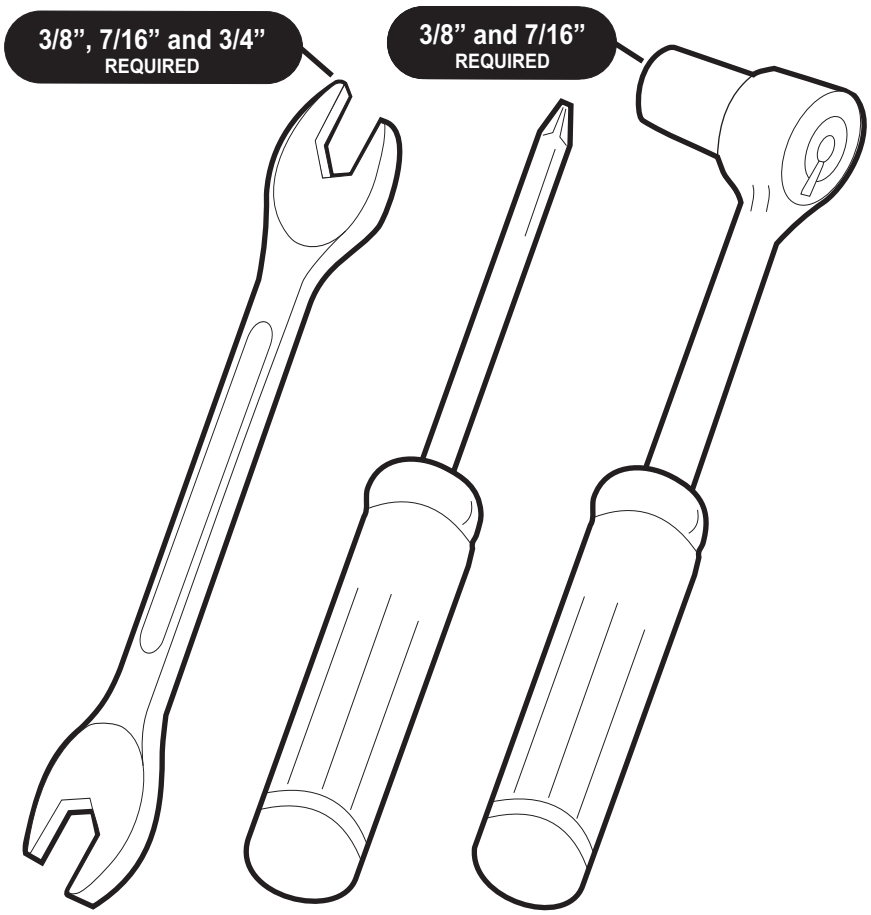

TOOLS
REQUIRED

P3X SERIES PARTS DIAGRAM

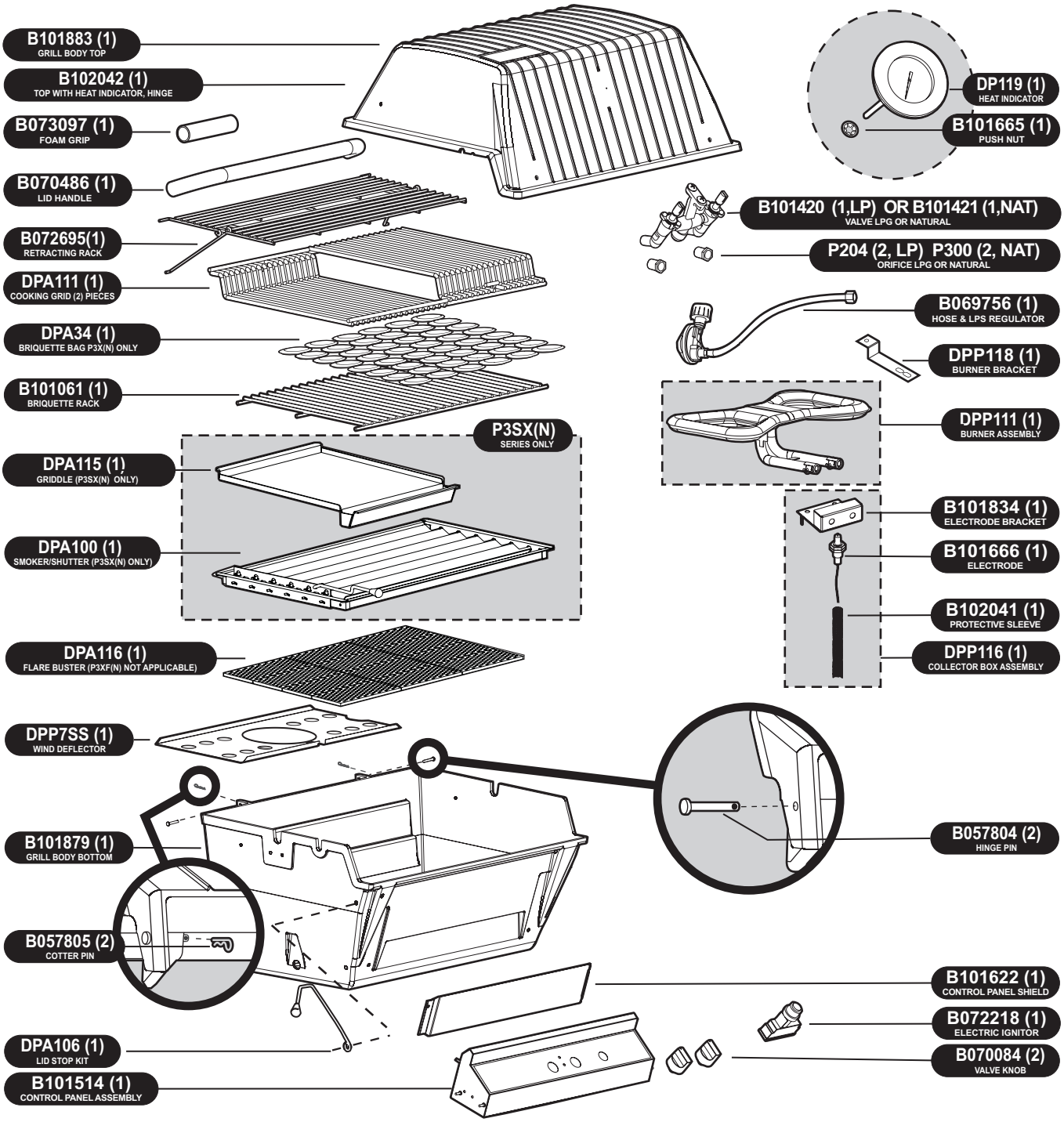

P4X SERIES PARTS DIAGRAM

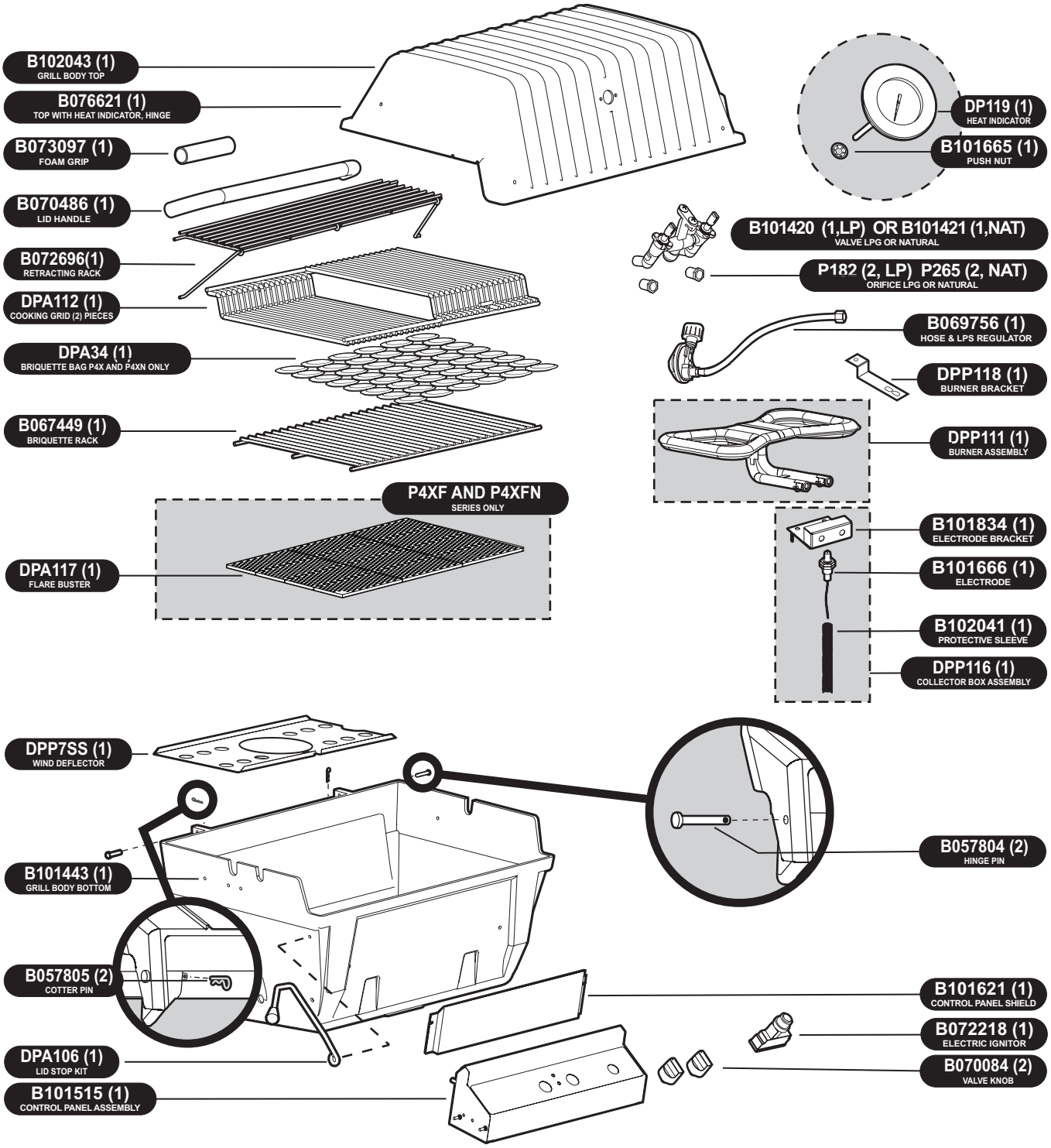

GRILL HEAD HARDWARE PACK - B102155

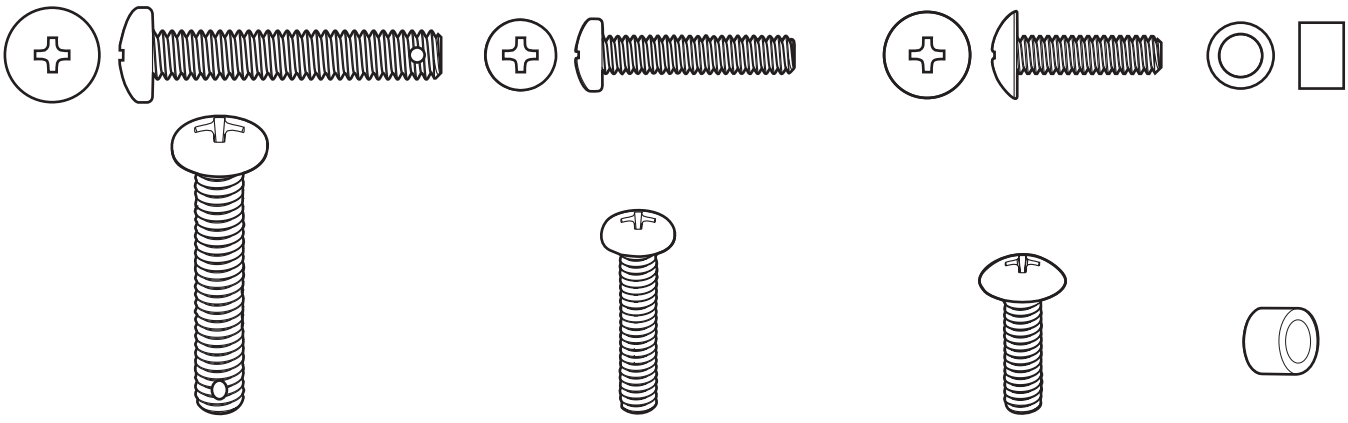

PHILLIPS PAN HEAD SCREW,
SS,1/4-20 X 1-1/2
B101649
(1)

PHILLIPS PAN HEAD SCREW,
SS,10-24 X 1
B073978
(2)

PHILLIPS TRUSS HEAD SCREW,
10-24 X 3/4
B100128
(1)

SPACER
B662325
(1)

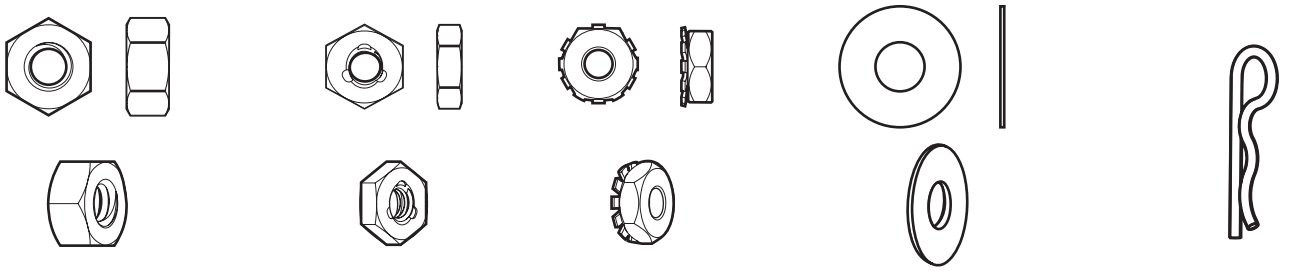

HEX NUT,
SS,1/4-20
B076331
(1)

HEX LOCKNUT,
SS,10-24
R4021
(1)

KEPS NUT,
SS,10-24
B073967
(3)

FLAT WASHER,
1/4 ID X 5/8 OD
B076332
(2)

COTTER PIN
B057805
(1)

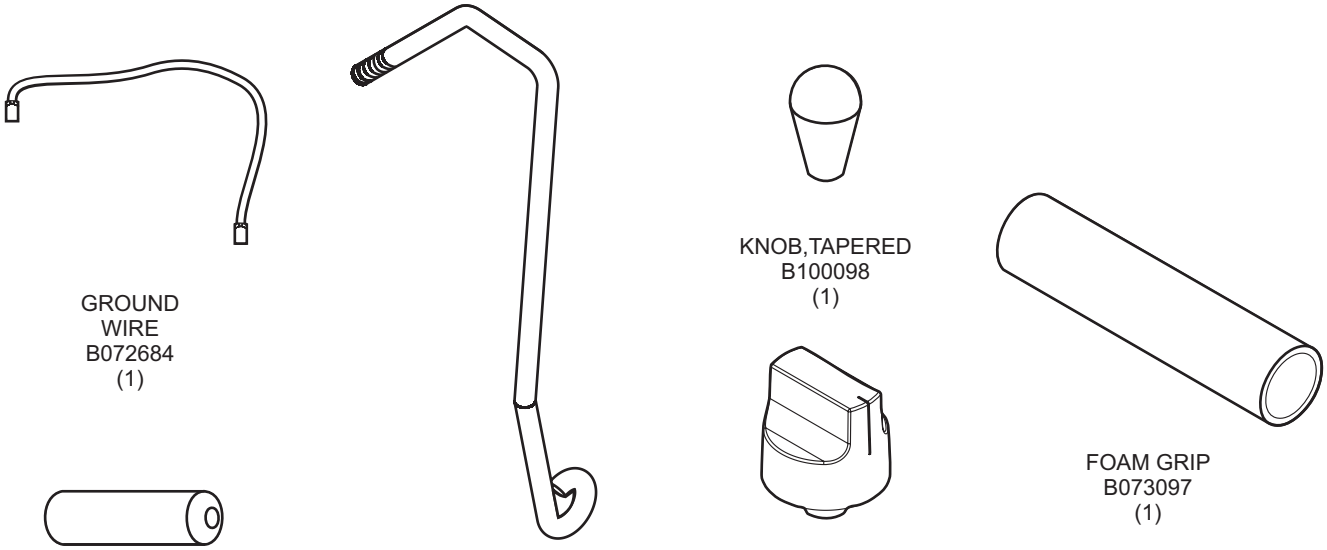

GROUND
WIRE
B072684
(1)

BATTERY, AA
B076529
(1)

LID, STOP
B076521
(1)

KNOB,TAPERED
B100098
(1)

KNOB
B070084
(2)

FOAM GRIP
B073097
(1)

UNPACK AND REMOVE LID

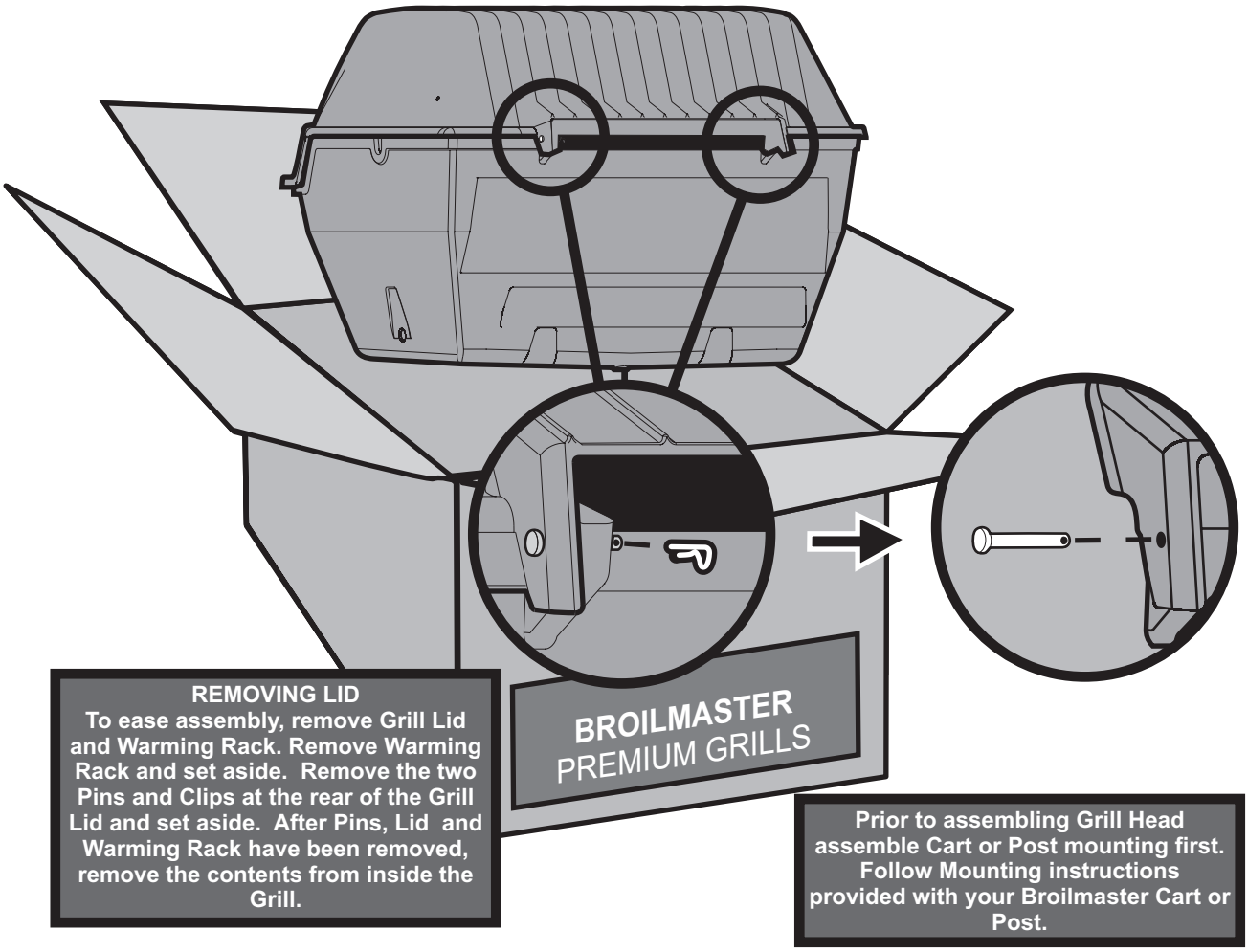

REMOVING LID
To ease assembly, remove Grill Lid and Warming Rack. Remove Warming Rack and set aside. Remove the two Pins and Clips at the rear of the Grill Lid and set aside. After Pins, Lid and Warming Rack have been removed, remove the contents from inside the Grill.

Prior to assembling Grill Head assemble Cart or Post mounting first. Follow Mounting instructions provided with your Broilmaster Cart or Post.

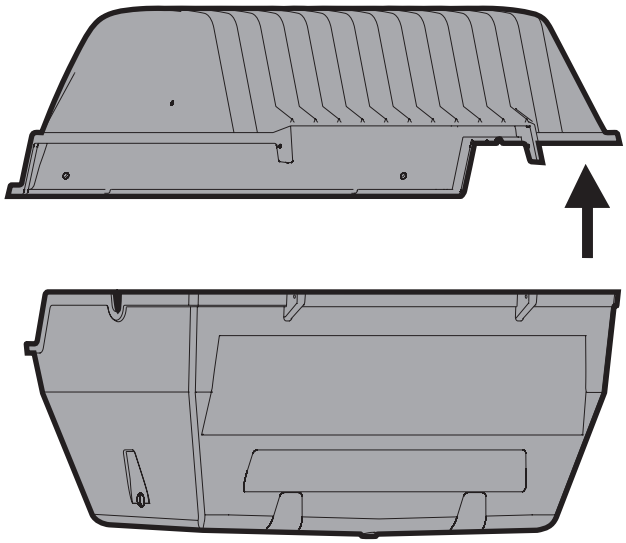

INSERT BURNER HOLD-DOWN BOLT

PHILLIPS PAN HEAD SCREW SS, 1/4-20 X 1-1/2 B101649 (1)

HEX NUT, SS, 1/4-20 B076331(1)

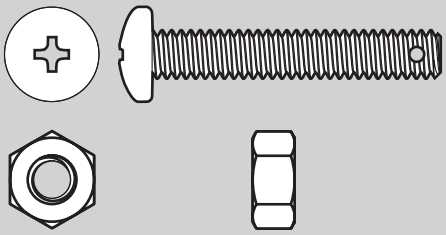

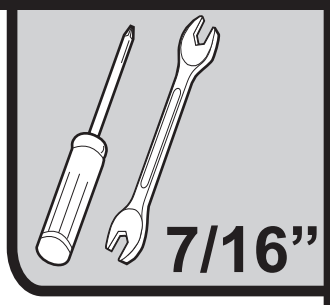

After the Securing Bolt has been installed, proceed and Install Grill Head on a Cart or Post Mounting. (See Grill Head on a Cart or Post Mounting Instructions that come with the mounting option).

WIND DEFLECTOR PLACEMENT

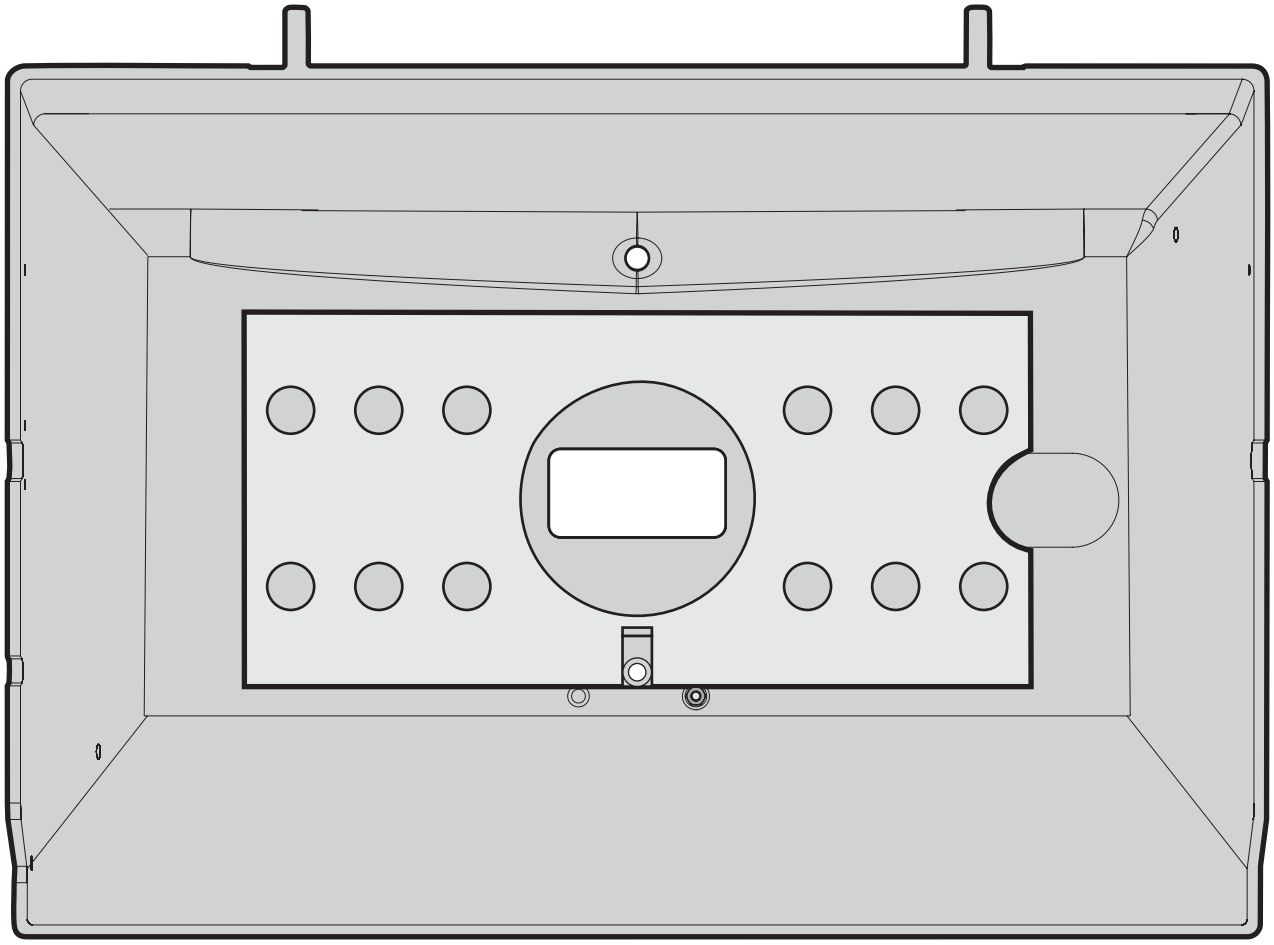

Place the Wind Deflector in the bottom Casting.

The Wind Deflector cannot be installed until after the bottom Casting is installed on theCart or Post.

INSERT CONTROL PANEL

KEPS NUT,
SS, 10-24
B073967(2)

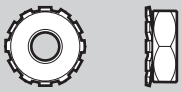

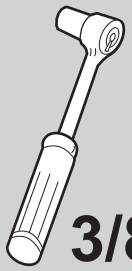

3/8”

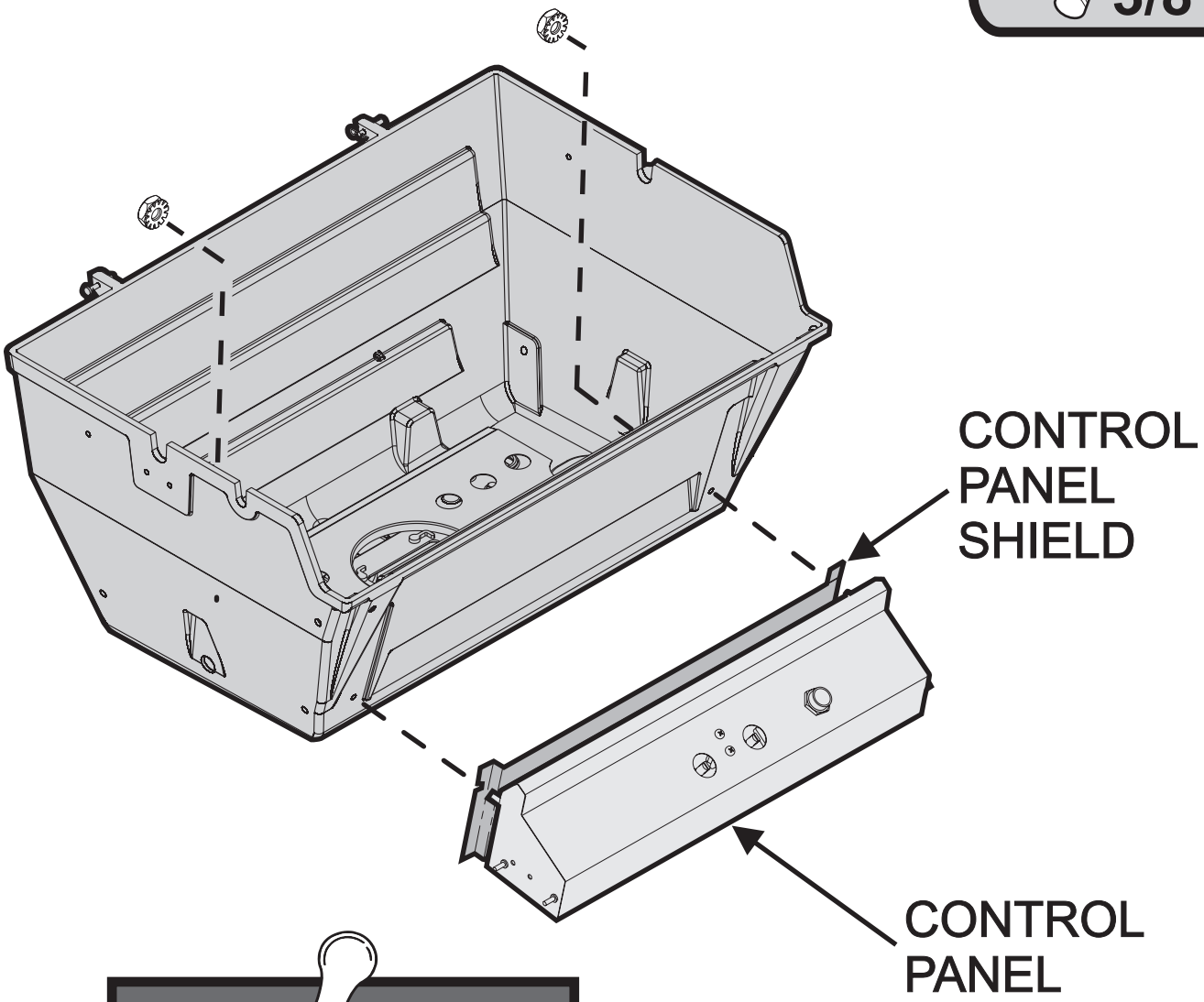

Note: If Side Shelf Accessory was purchased install at this time. Follow Side Shelf instructions.

ATTACH IGNITER WIRE

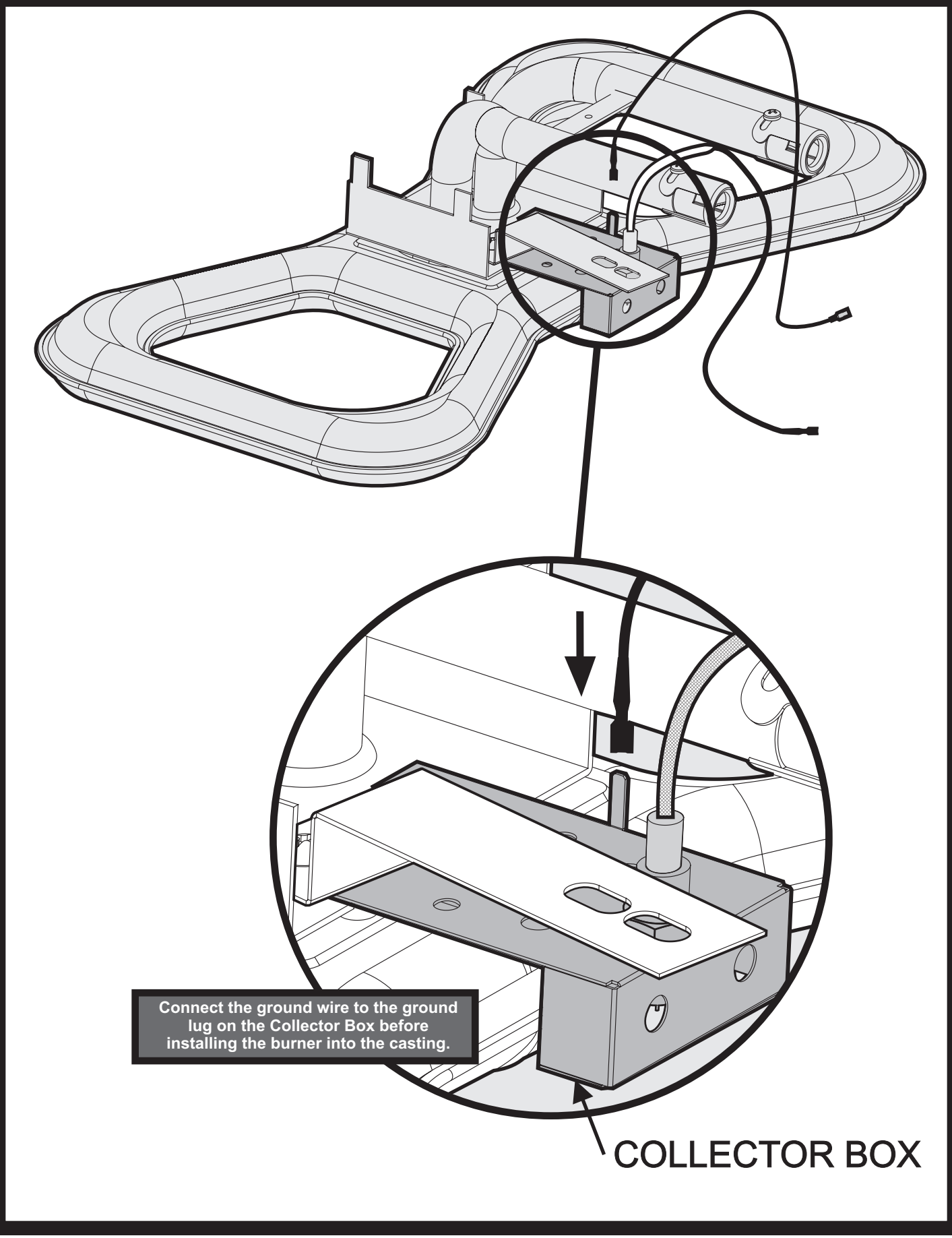

INSTALL BURNER ASSEMBLY

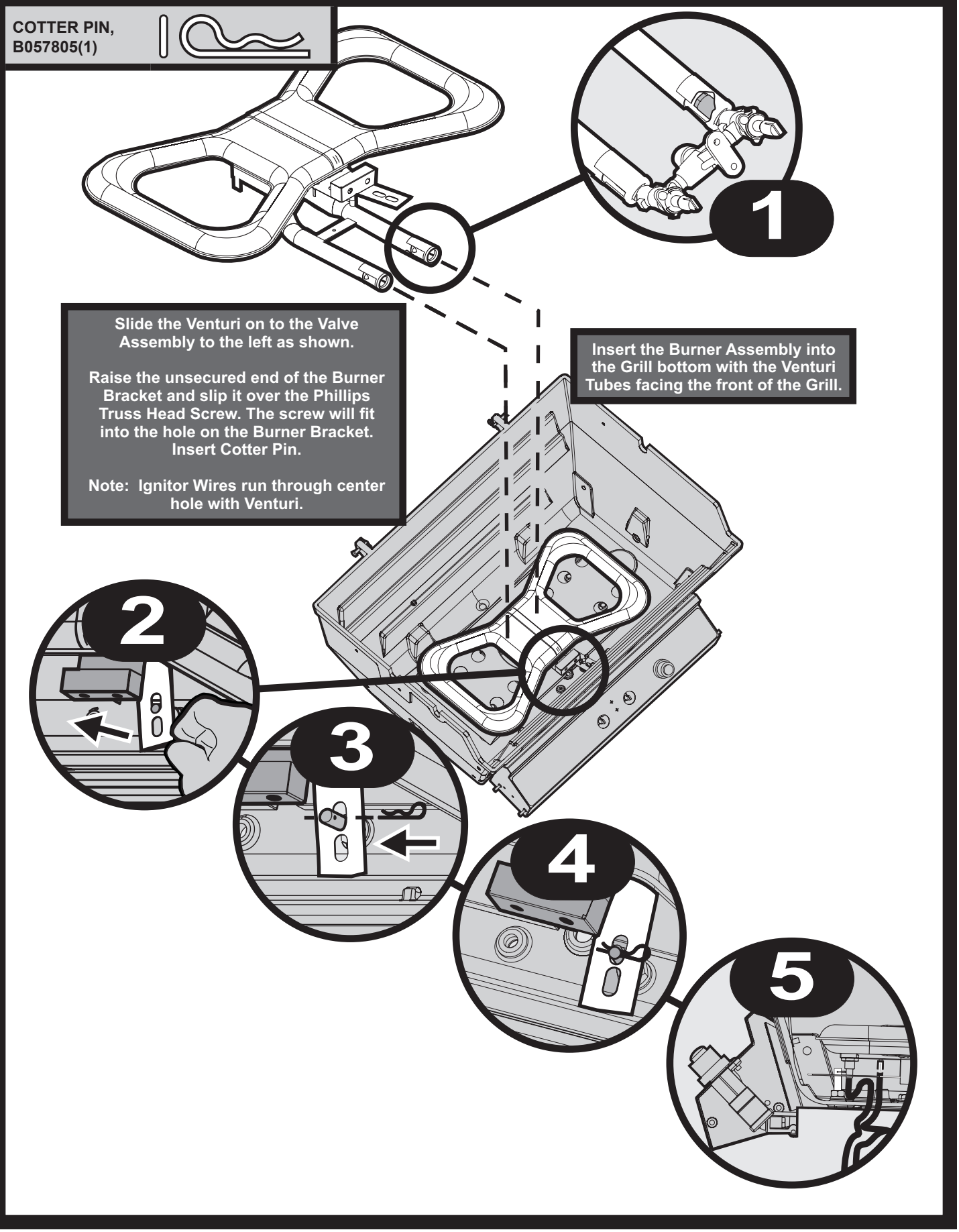

CONNECT IGNITER LEADS

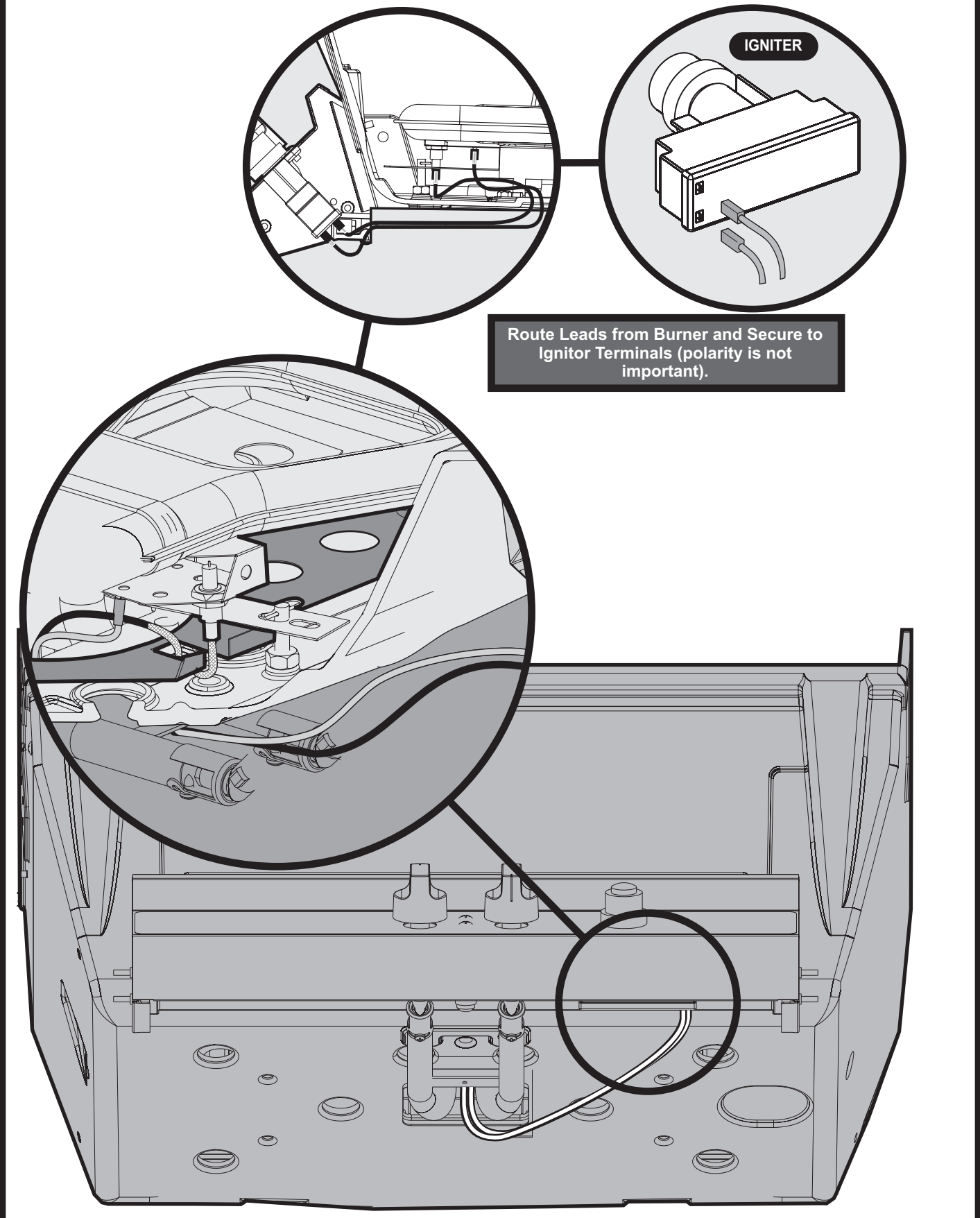

KNOB AND BATTERY PLACEMENT

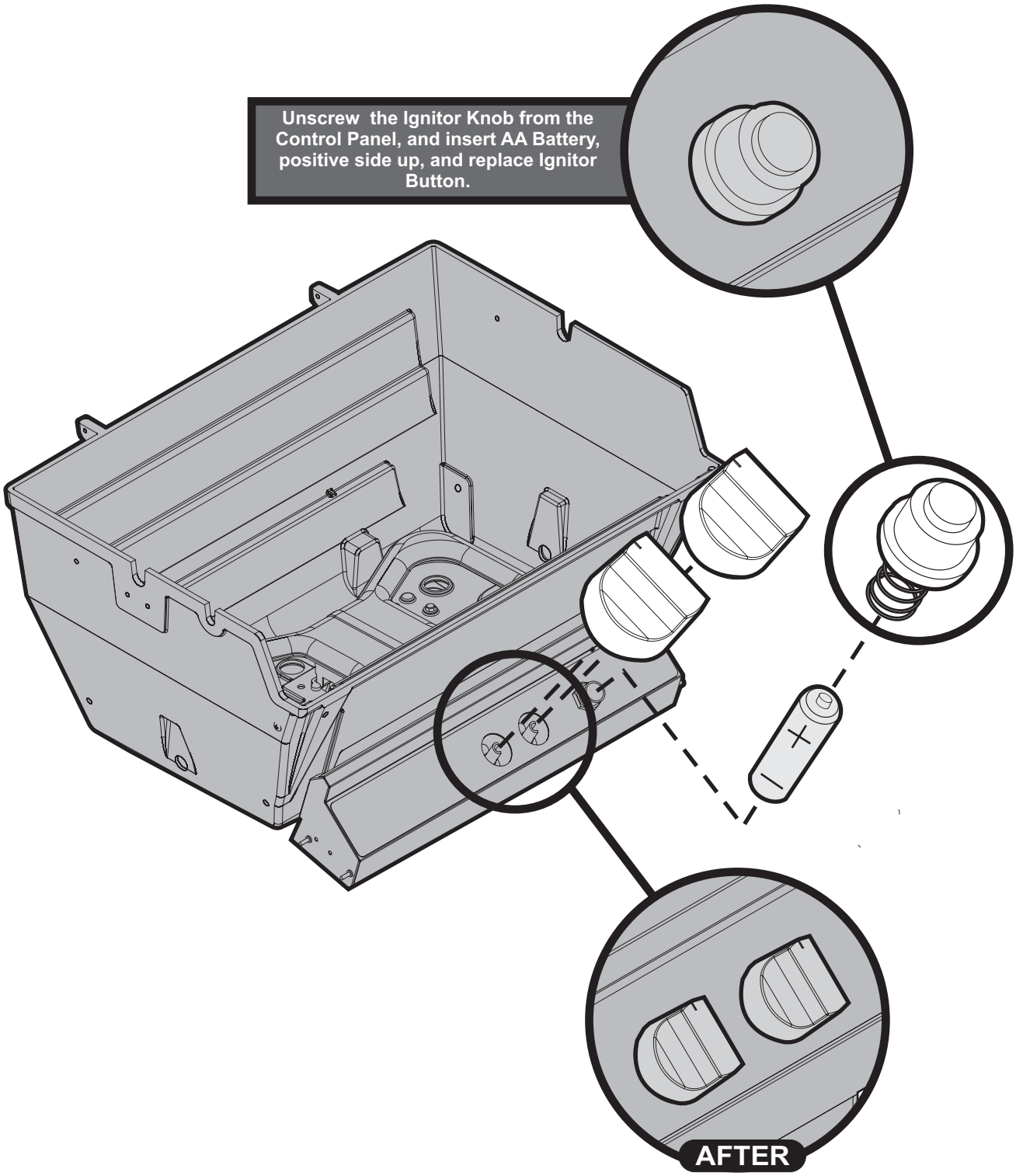

INSTALL LID STOP

PHILLIPS TRUSS HEAD SCREW,
SS,10-24 X 3/4
B100128 (1)

HEX LOCK NUT,
SS, 10-24
R4021 (1)

FLAT WASHER
1/4 x 5/8 OD
B076332 (2)

SPACER,
B662325 (1)

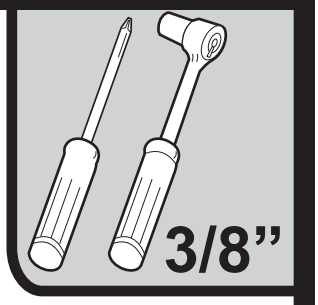

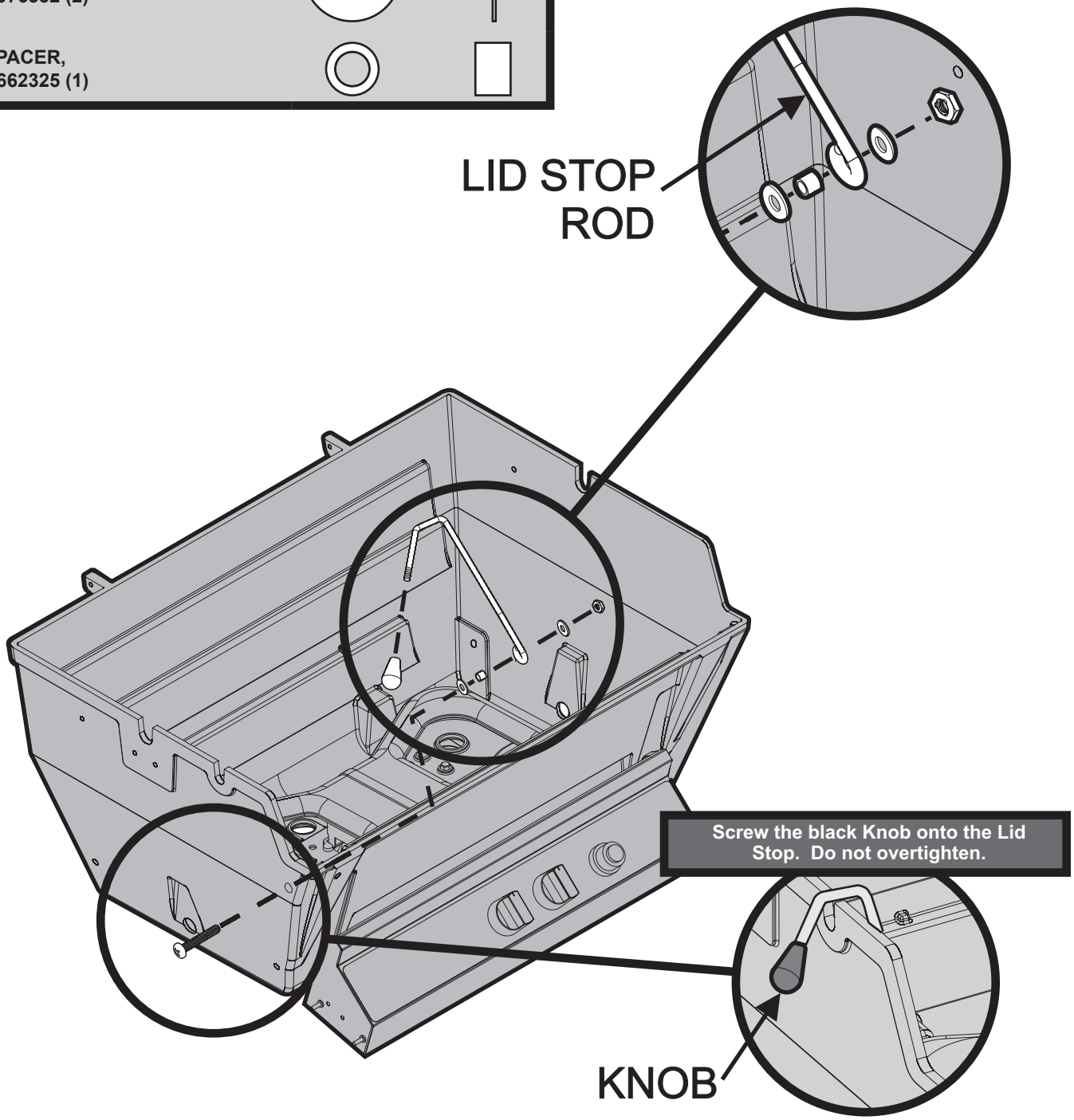

Screw the black Knob onto the Lid Stop. Do not overtighten.

HANDLE INSTALLATION

PHILLIPS PAN HEAD SCREW, SS,10-24 X 1 B073978 (2)	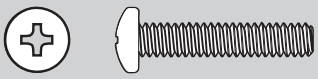

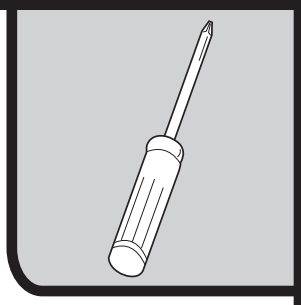

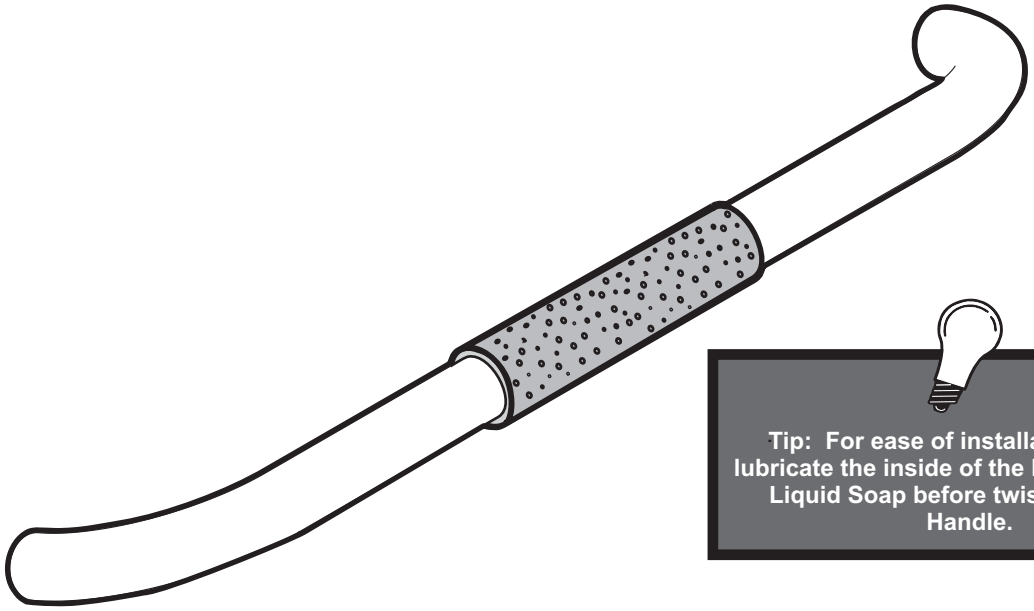

Tip: For ease of installation, lightly lubricate the inside of the Foam Grip with Liquid Soap before twisting it on to Handle.

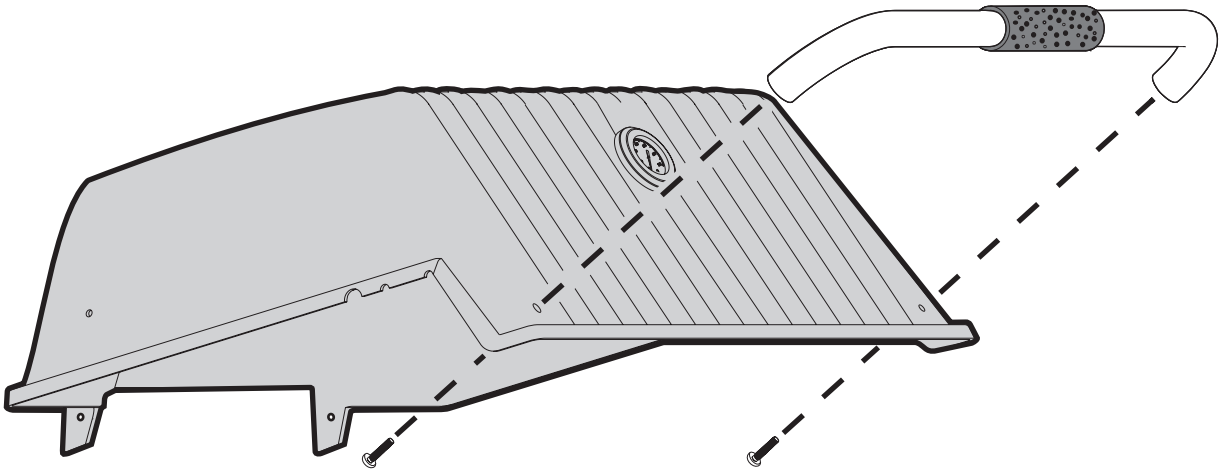

REINSTALL LID

HINGE PIN,
(FROM PREVIOUS STEPS)
B057804 (1)

COTTER PIN,
(FROM PREVIOUS STEPS)
B057805 (1)

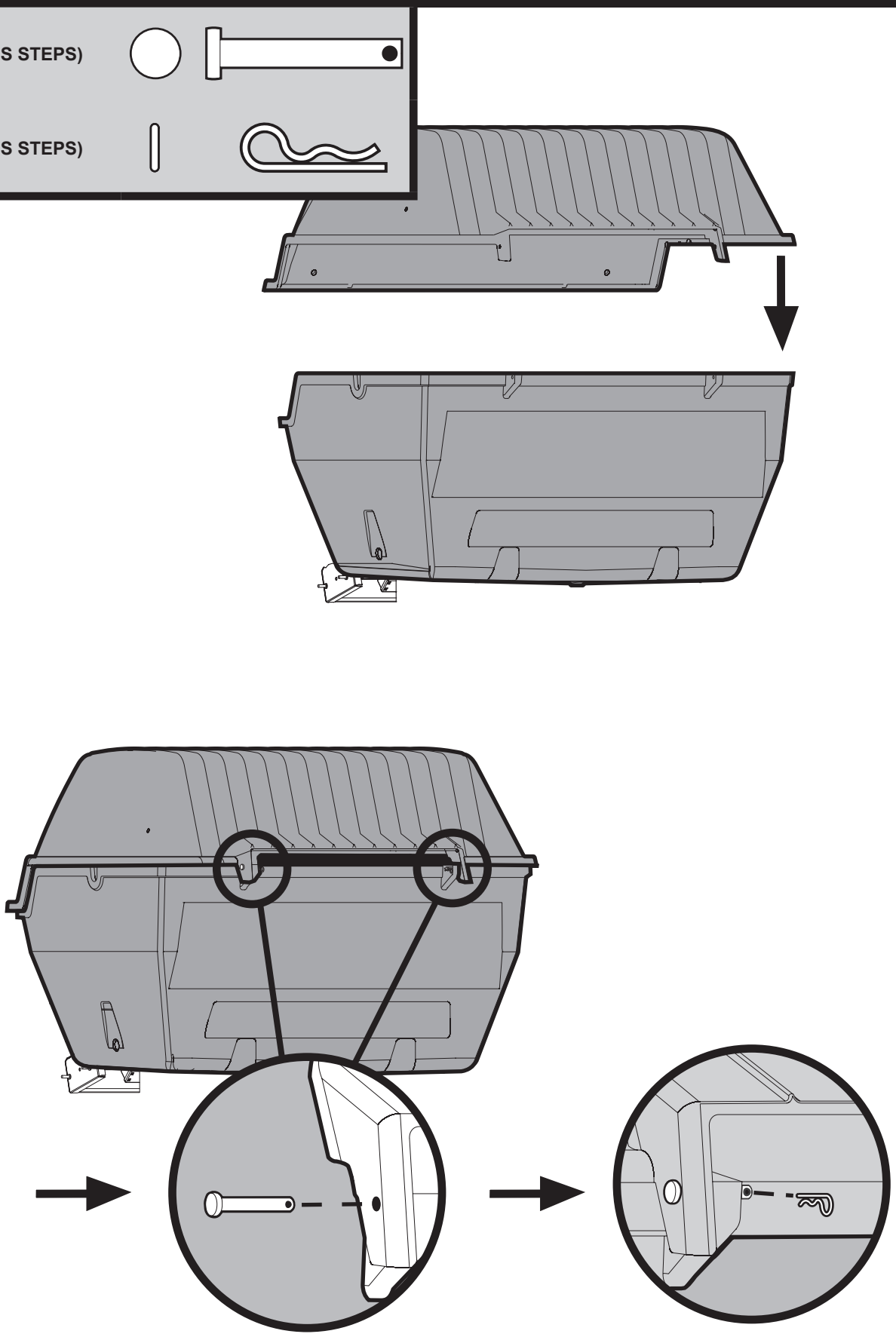

P3XF(N), P4XF(N) FLARE BUSTERS AND RACKS

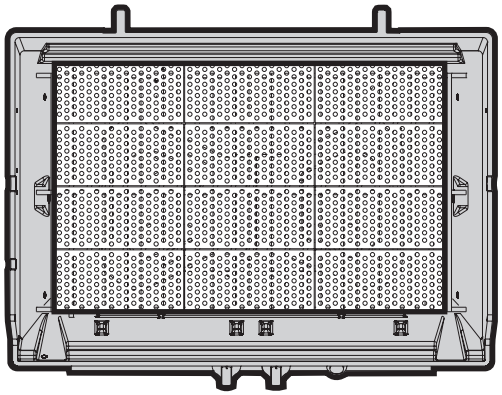

P3SXF(N) MODELS

Position the Flare Busters as shown

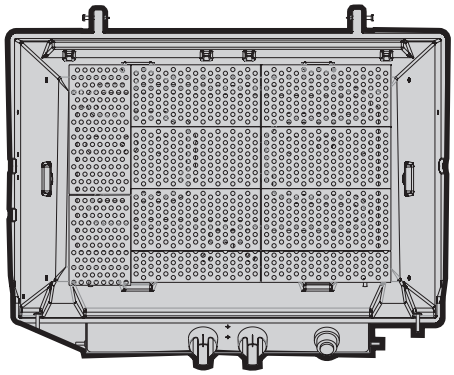

P4XF(N) MODELS

Position the Flare Busters as shown

P3SX(N) FLARE BUSTERS,SMOKER SHUTTER AND RACKS

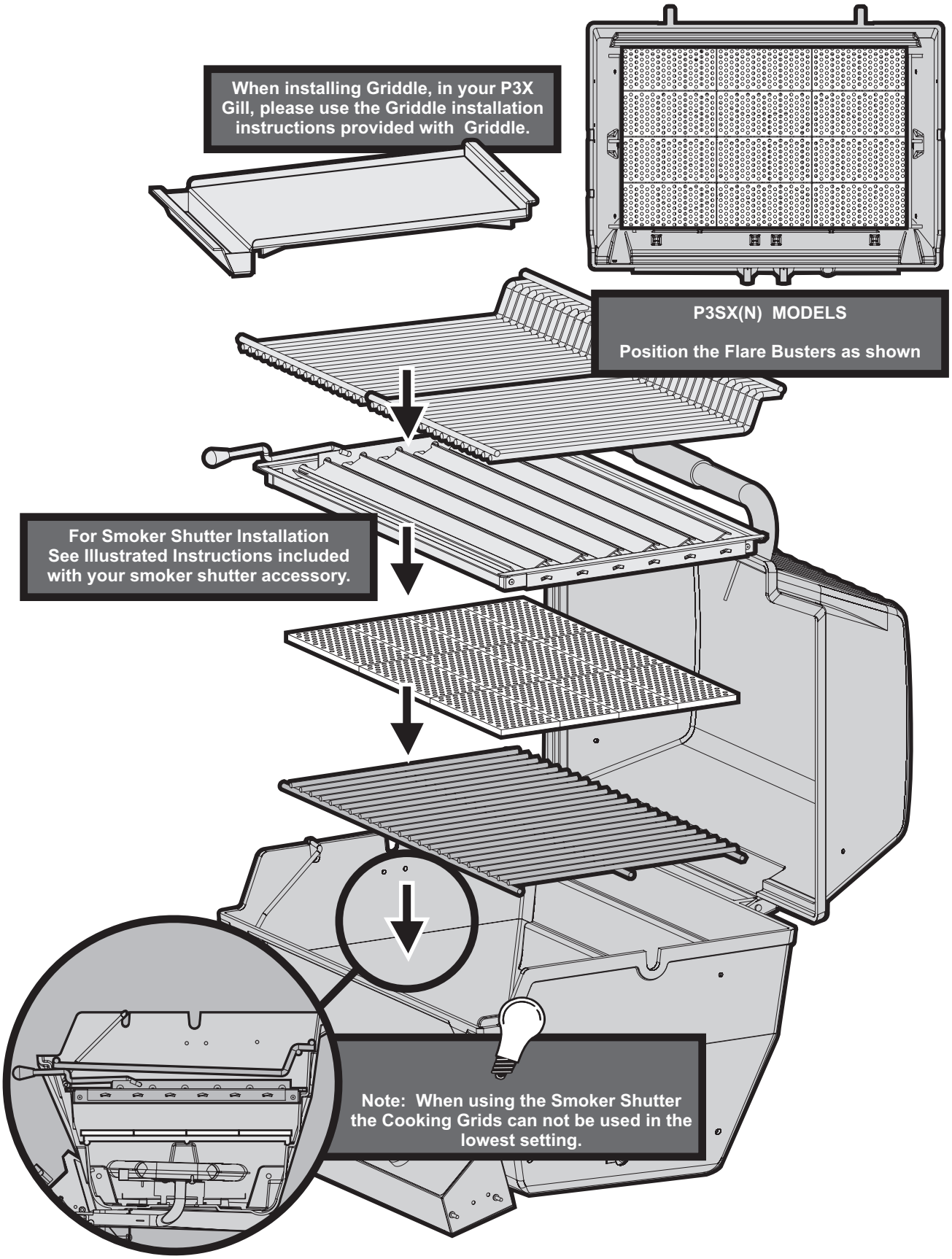

P3X(N) AND P4X(N) BRIQUETS AND RACKS

Place the 'Char-Master' Briquets in a single layer evenly on your grill's briquet rack. DO NOT dump them onto the briquet rack. A single layer of 'Char-Master' Briquets is all that's needed.

There may be some briquets left over. Save them for future use.

Before cooking, always preheat the grill as directed by the grill's operating instructions. Hot briquets give better flavor and allow quicker cooking.

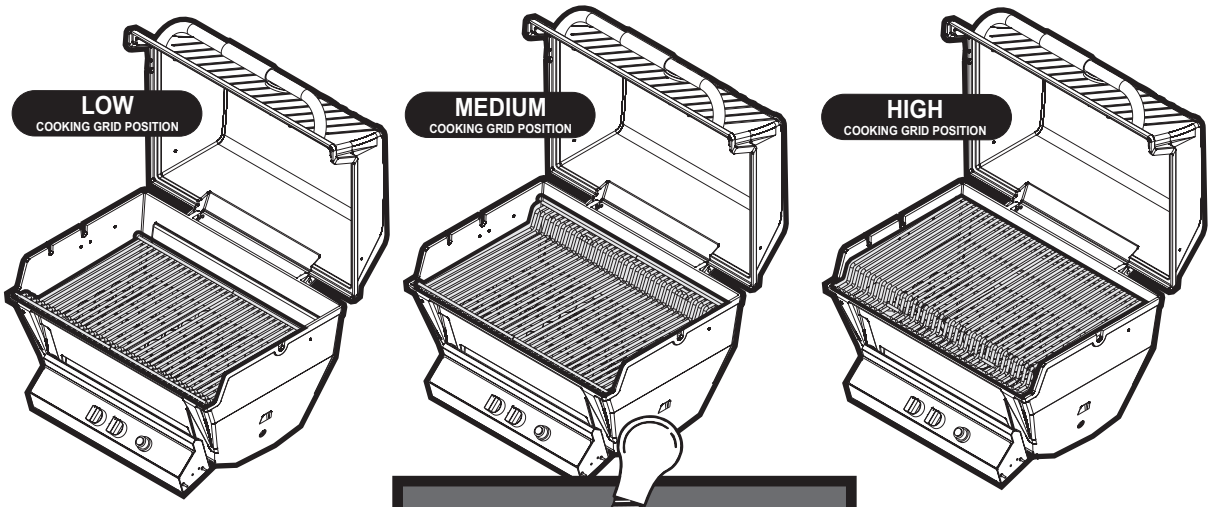

P3 series grills adjust to all 3 levels. P4 series grills adjusts to medium and high levels only.

INSTALL RACKS

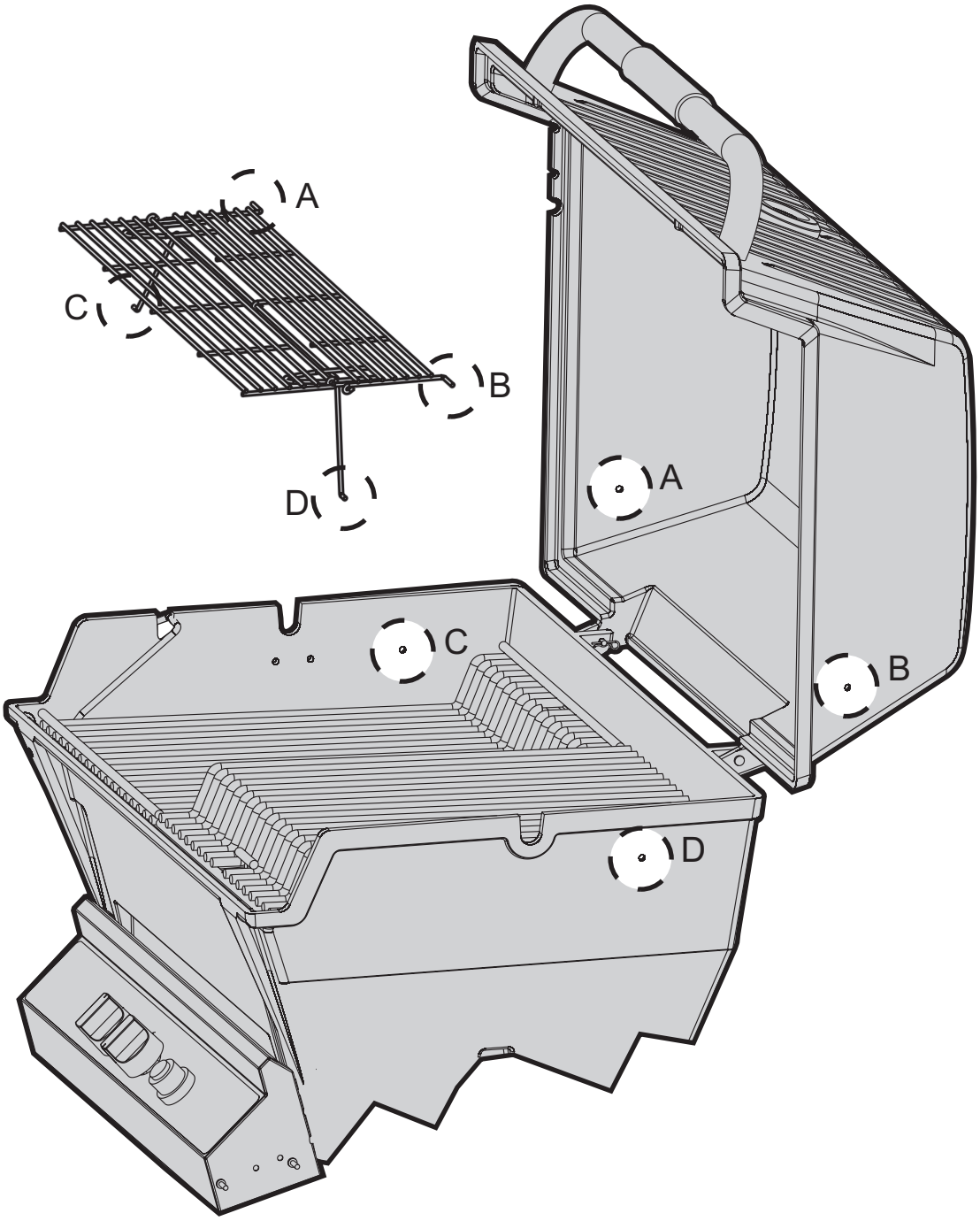

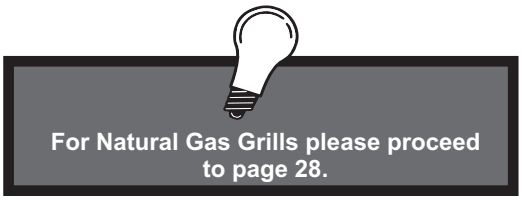

For Natural Gas Grills please proceed to page 28.

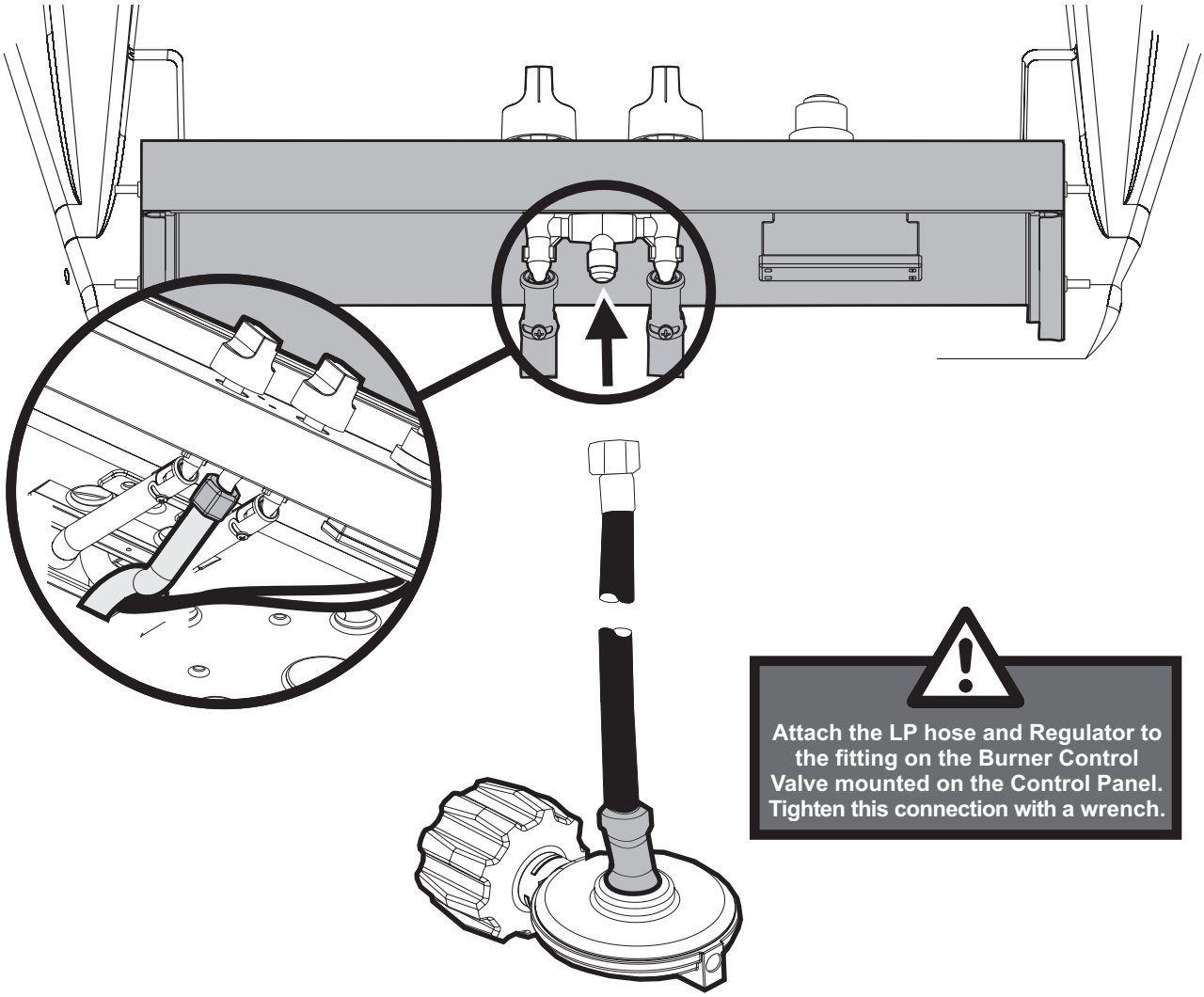

Attach the LP hose and Regulator to the fitting on the Burner Control Valve mounted on the Control Panel. Tighten this connection with a wrench.

LP GAS REGULATOR AND HOSE

Grill Location

This grill is designed for outdoor use only.

Never operate your grill in any building, garage, or other enclosed area. Never operate your grill in a recreational vehicle or boat. Never operate your grill under any combustible materials, such as carports, covered porches, awnings, or overhangs.

⚠ CAUTION

Keep the sides of the grill at least 16 inches from any combustible material. Keep the back of the grill at least 18 inches from any combustible material. Placing a hot grill too close to a building or other combustible material may lead to fire, property damage, or personal injury. Combustible materials include fences, patio furniture, and your home.

Keep the area around the grill clear to ensure proper ventilation. The ventilation openings on the propane cylinder enclosure must also remain free and clear of debris.

Before lighting the grill, position it on a level surface away from direct wind.

Never move a hot grill.

⚠ WARNING

Do not install or operate this grill where gasoline or other flammable materials are used or stored. Failure to comply with this warning could result in explosion or fire causing property damage or personal injury.

Propane Cylinder Safety

Propane vapor fuels your grill. Propane is a liquid only when it is highly compressed. Keeping it compressed requires a heavy-duty tank - the LP cylinder.

Inside a full cylinder, the liquid propane makes top up the bottom 80 percent; while propane vapor makes up the 20 percent. As you draw this vapor from the top of the tank, the liquid below expands and turns to vapor. Once all of the liquid turns to vapor, pressure inside the cylinder drops and gas flow stops.

Liquid Propane (LP) gas has a long history of safe use when the safety precautions provided in this manual are followed.

Failure to follow these safety precautions could result in a fire or explosion causing property damage or personal injury.

Use extreme caution when handling propane gas cylinders.

Keep the cylinder upright while carrying.

While transporting in a vehicle, keep the cylinder upright and secured to prevent movement. Never place a propane gas cylinder in the passenger area of a vehicle.

Replace any cylinder that has been dropped, dented, has a malfunctioning valve, or is visibly damaged. Never attempt to use or repair a damaged propane gas cylinder.

When refilling your cylinder, always insist on a reputable, qualified gas dealer. Your propane gas cylinder is filled by weight, and should never exceed eighty percent (80%) of its weight limit. If the cylinder is not completely empty, the gas dealer must make adjustments to ensure it is not overfilled. Never use an overfilled Propane gas cylinder.

When you finish grilling, turn off the grill's burners and turn off the gas at the cylinder. If the grill will not be used for an extend period, remove the cylinder from the grill for storage.

Cylinder Storage

Store your grill outdoors in a well-ventilated area when the LP cylinder is attached to it.

Store Propane cylinders in a secured upright position.

Keep children away from LP cylinders.

Store cylinders out of direct sunlight and well away from heat sources. Do not store cylinders in a building, garage, or other enclosed area.

Disconnected cylinders must have a threaded valve plug tightly installed.

Do not store flammable materials near LP cylinders-including gasoline, paper, grill covers, etc.

Propane Cylinder Requirements

Your Broilmaster Premium Gas Grill requires a standard twenty pound propane gas cylinder, which is available from your grill dealer, your LP supplier, and at most hardware and home stores.

⚠ CAUTION

Do not use a propane gas cylinder which has a capacity greater than twenty pounds with this grill.

The propane gas cylinder used must be:

1. Constructed and marked in accordance with the specifications for LP gas cylinder of the U.S. Department of Transportation (D.O.T.) or the National Standard of Canada, CAN/CSA-B339, Cylinders, Spheres, and Tubes for Transportation of Dangerous Goods, and Commission as applicable.

2. Provided with a listed overfilling protection device (OPD).

3. Provided with a listed safety device having direct access with the vapor space of the cylinder and the cylinder supply system must be arranged for vapor removal. (Which means the valve assembly is located at top of the LP cylinder and the cylinder must remain upright for the propane to come out of the valve as vapor.)

4. Provided with a shutoff valve terminating in a valve outlet as specified in the Standard for Compressed Gas Cylinder Outlet and Inlet Connections, ANSICGA-V-1.

5. Provided with a plug to effectively seal off the cylinder outlet when the cylinder is being stored or transported.

6. Provided with a collar to protect the cylinder valve.

Connection Requirements

Installation must conform to local codes or, in the absence of local codes, with the National Fuel Gas Code, ANSI Z223.1. In Canada, installation shall be in accordance with CAN/CGA-B149.2 Propane Installation Code, or CAN/CGA-B149.1 Natural Gas Installation Code, and local codes where applicable. Consult your local gas supplier or propane gas dealer for code regulations and recommended procedures.

⚠ WARNING

Use Propane gas cylinders equipped with an Overfill Protection Device (OPD). An overfilled or improperly filled propane cylinder can cause a fire or explosion.

⚠ CAUTION

Never use Liquid Propane (LP) gas in a grill designed for Natural gas, or use Natural gas in a grill designed for Liquid Propane gas. Questions regarding different types of gases should be directed to your local gas supplier.

ATTENTION: Propane gas cylinders must comply with Cylinder Requirements and Connection Requirements above.

Note: Not all valve and cylinder combinations are compatible. Check warning tag on valve and cylinder as well as external fitting threads.

All Broilmaster pressure regulators and hose assemblies require Propane cylinders with a Type 1 connection device as illustrated. **See Figure Below.**

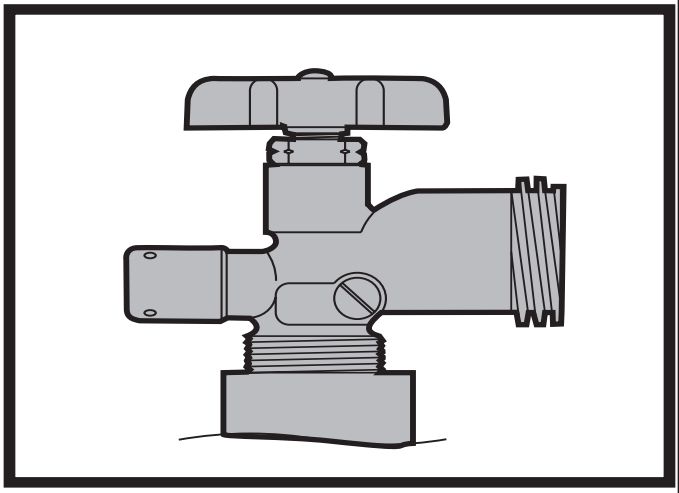

TYPE 1 LP CONNECTION

Inspect the threaded outlet on the tank and the threaded inlet on the grill's pressure regulator for dirt, nicks, or corrosion that might interfere with a gas-tight connection. If the tank outlet shows damage, return the tank to the supplier for a replacement. If the grill's pressure regulator shows nicks or other damage, contact your dealer for genuine Broilmaster replacement parts.

Pressure Regulator and Hose Assembly

The pressure regulator has an outlet pressure of not more than eleven inches water column. It must be connected to the Propane gas cylinder's female valve outlet before the grill can be operated.

⚠ CAUTION

Operating a Propane gas grill without the pressure regulator and hose assembly will cause gas leaks which could lead to fire or explosion, resulting in property damage or personal injury.

Inspect the threaded outlet on the tank and the threaded inlet on the grill's pressure regulator for dirt, nicks, or corrosion that might interfere with a gas-tight connection. If the tank outlet shows damage, return the tank to the supplier for a replacement. If the grill's pressure regulator shows nicks or other damage, contact your dealer for genuine Broilmaster replacement parts.

PROPANE GAS GRILLS

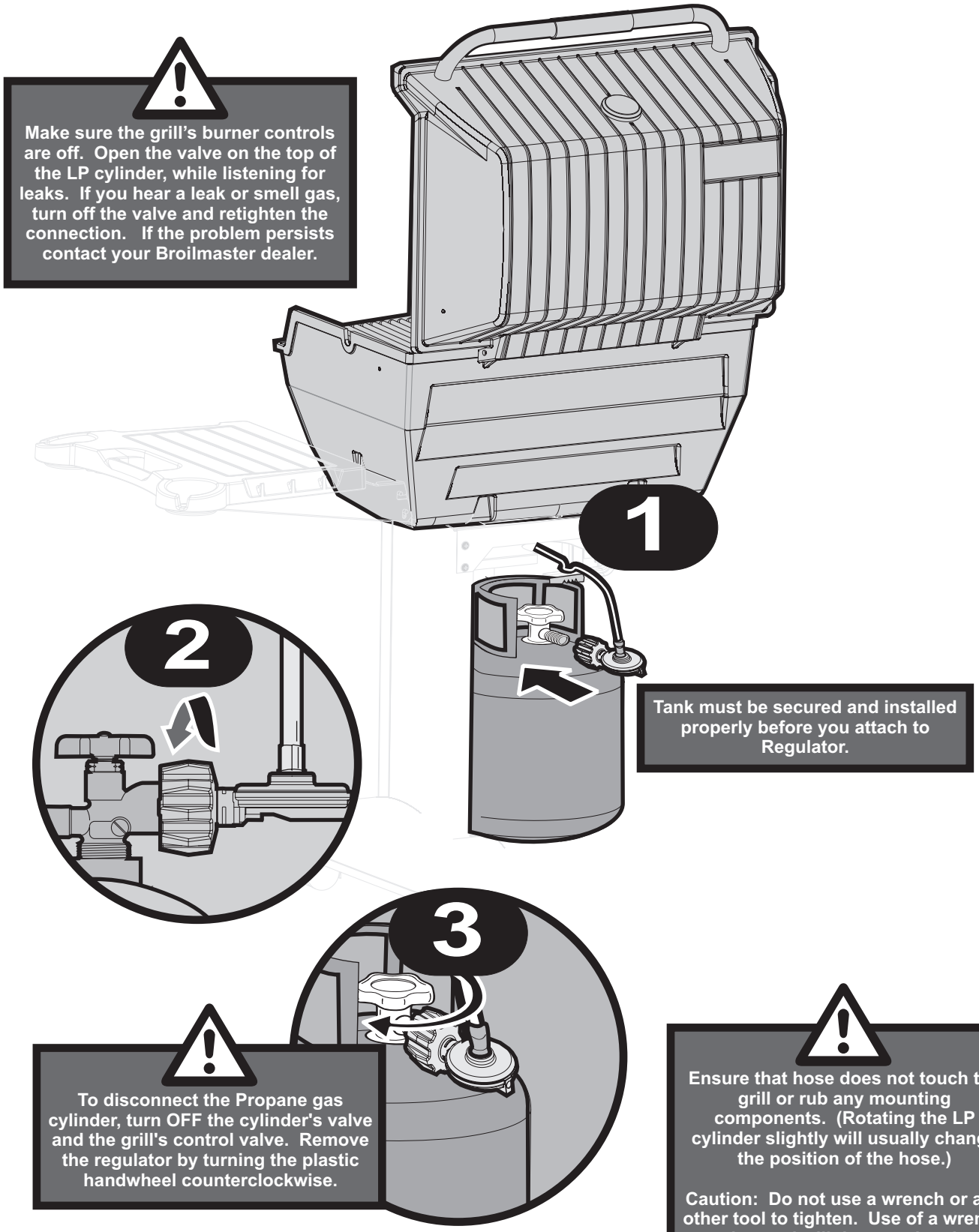

NATURAL GAS GRILLS

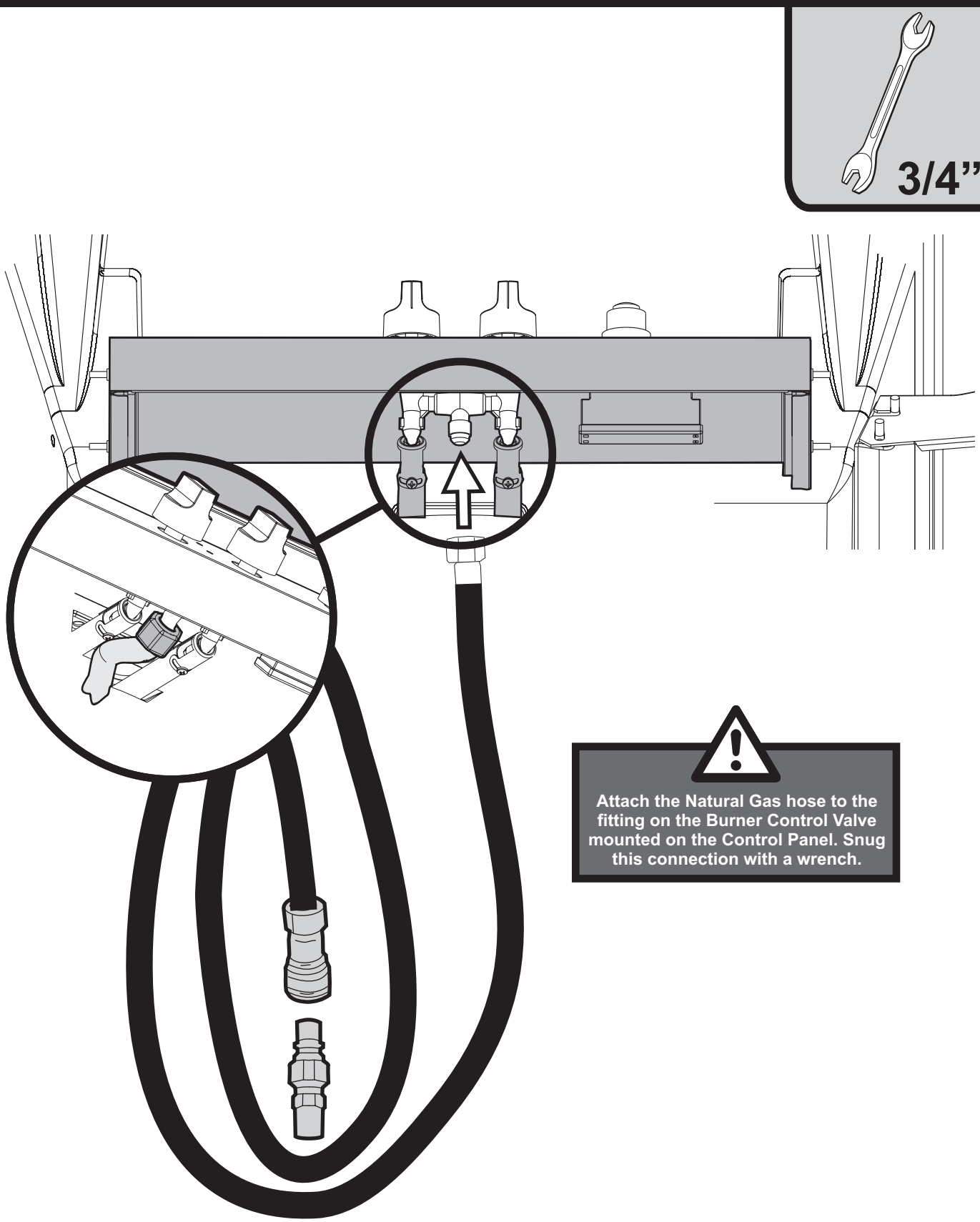

12 FT QUICK DISCONNECT HOSE

Not Supplied (Purchased Accessory)

NATURAL GAS GRILLS

Grill Location

This grill is designed for outdoor use only.

Never operate your grill in any building, garage, or other enclosed area. Never operate your grill in a recreational vehicle or boat. Never operate your grill under any combustible materials, such as carports, covered porches, awnings, or overhangs.

⚠ CAUTION

Keep the sides of the grill at least 16 inches from any combustible material. Keep the back of the grill at least 18 inches from any combustible material. Placing a hot grill too close to a building or other combustible material may lead to fire, property damage, or personal injury. Combustible materials include fences, patio furniture, and your home.

Keep the area around the grill clear to ensure proper ventilation.

⚠ WARNING

Do not install or operate this grill where gasoline or other flammable materials are used or stored. Failure to comply with this warning could result in explosion or fire causing property damage or personal injury.

Gas Type

The type gas required for your grill can be determined from the product identification label located on the grill's control panel. Questions regarding different types of gases should be directed to your local gas supplier.

⚠ CAUTION

Never use Liquid Propane (LP) gas in a grill designed for Natural gas, or Natural gas in a grill designed for Liquid Propane gas. Questions regarding different types of gases should be directed to your local gas company.

Connection Requirements

Broilmaster natural gas grills are not equipped with pressure regulators. Your gas grill operates at a manifold pressure of seven inches water column. (Your natural gas technician will understand what this means.)

For a cart-mounted Natural gas grill have a trained technician from your gas supplier or your grill dealer run the gas line to a convenient location, terminating in a gas valve and a quick-connect gas fitting.

Connect your grill to this coupling using the twelve-foot flexible hose with a quick disconnect fitting (available for purchase from your Broilmaster dealer.)

⚠ CAUTION

The grill and its individual shutoff valve must be disconnected from the gas supply piping system during any system pressure testing at test pressures in excess of 1/2 PSIG.

⚠ CAUTION

The grill must be isolated from the gas supply piping system by closing its individual manual shutoff valve during any pressure testing of the gas supply piping system at test pressures equal to or less than 1/2 PSIG.

COMPLETED ASSEMBLY

Thank you for purchasing a Premium Gas Grill and we hope you enjoy years of great meals prepared on your Broilmaster. Please feel free to visit the Broilmaster Facebook page and share photos of your Broilmaster grill.

Thank You!

Check for Gas Leaks

Check for gas leaks every time you connect your Broilmaster propane gas grill to a Propane gas cylinder, when a connected cylinder has not been used recently, or when either a natural or propane grill is being used for the first time.

⚠ CAUTION

Do not use an open flame when checking for leaks. Checking for leaks with an open flame may lead to a fire or explosion, resulting in property damage or personal injury.

To check for gas leaks:

1. Use water dish and a little dish washing liquid to make a soapy solution.
2. Turn OFF the knob on the control panel.
3. Turn ON the gas at the supply or cylinder. A hissing sound indicates a leak. Turn OFF the gas and repair the leak.
4. Apply the soapy water solution to all gas connections.
5. Look for bubbles. Bubbles indicate a leak.
6. If you see bubbles turn OFF the gas and repair the leak.
7. Turn the gas back ON and repeat the above procedures until all leaks are repaired.

Air Shutter Adjustment

The venturi air shutter(s) are preset at the factory so that after five minutes the burner flames are blue with well defined cones. If, after five minutes the flame is yellow, or there is a gap between the burner and the flame, adjust the venturi air shutter as follows:

1. Turn gas OFF and let the burner cool.
2. Loosen shutter set screw.
3. Close the air shutter to the minimum opening.
4. Light the burner, wait five minutes and then carefully open the air shutter until the flame is blue and well-defined.
5. Retighten the set screw.

Heat Indicator Recalibration

The heat indicator can be recalibrated if needed. Remove the heat indicator from the grill and place the probe end in a pot of boiling water. Set the heat indicator by turning the nut on the back until it reads 212 degrees. The indicator is now set.

Operating Instructions

Lighting with the Electric Igniter

⚠ CAUTION

If a burner fails to light after 5 seconds, turn the burner OFF for 5 minutes, to allow the gas to clear, then try again.

1. Open the grill lid.
2. Turn burner knob CLOCKWISE to the OFF position.
3. Turn ON the gas at the source.
4. With the grill lid open, push and turn the burner control knob COUNTERCLOCKWISE to Hi.
5. Push and hold the igniter button until the burner lights (approximately 5 seconds).
6. If a burner does not light, turn OFF all gas and refer to the Troubleshooting section of this manual.

Lighting with a Match

⚠ CAUTION

If a burner fails to light after 5 seconds, turn the burner OFF for 5 minutes, to allow the gas to clear, then try again.

1. Open the grill lid.
2. Turn the burner knob CLOCKWISE to the OFF position.
3. Turn ON gas at the source.
4. With the grill lid open, push and turn the burner control knob COUNTERCLOCKWISE to HI.
5. Insert a long wooden lighted match through the lighter hole on either side of the grill. **See Figure Below.**
6. If a burner does not light, turn OFF all gas and refer to the Troubleshooting section of this manual.

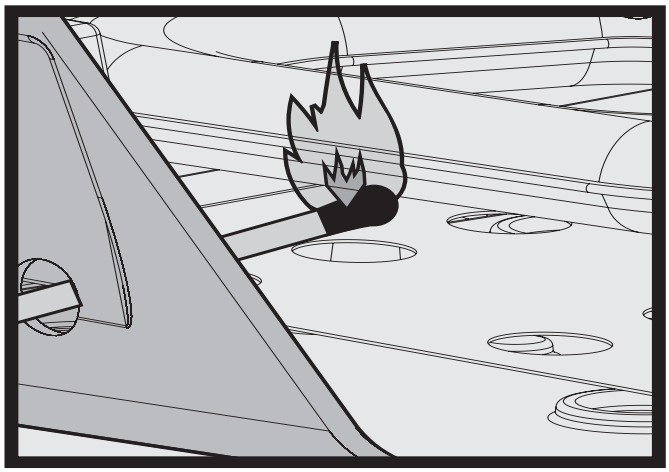

LIGHTING WITH A MATCH

Before Cooking

Before cooking on a grill for the first time, burn off any oil residue from the manufacturing process.

1. Open the grill lid.
2. Light grill burner.
3. Burn on HI for ten minutes.
4. Close the lid and burn on HI for an additional ten minutes.
5. The grill is now ready for use.

Preheating

Before cooking on a gas grill, allow the grill to preheat on HI for 5 minutes with the lid closed.
Preheating uses very little fuel, provides better flavor, and provides more consistent cooking times.

Electrical Accessories

Any electrical accessory (e.g. rotisserie) is used on your grill, must be electrically grounded in accordance with local codes or, in the absence of local codes, with the National Electric Code, ANSI/NFPA 70. In Canada, the electrical accessory must be electrically grounded in accordance with the applicable section of the current Canadian Electrical Code, CSA C22.1.

Any electrical accessory should be equipped with a three-prong (grounding) plug, and plugged into a properly grounded three-prong receptacle or wall outlet. Do not cut or remove the grounding prong from the plug.

If an extension cord is required, use only a three-prong cord and plug into a properly grounded receptacle as described above.
Do not expose an electrical accessory to water. Avoid using any electrical accessory in wet weather as it may present a shock hazard.

Keep any electrical cord and fuel supply hose away from all heated surfaces.

MAINTENANCE

Cleaning the Grill

⚠ CAUTION

To prevent injury, use care when cleaning a hot grill.

Buy a good grill brush. Inexpensive grill brushes tend to lose their metal bristles, which can stick to your cooking grids and become embedded in foods.

A grill builds up a patina of smoke residue. The "seasoning" is normal and actually enhances the flavor of your foods. If the build-up grows too think, it can flake off and fall onto your food. To remove excess build-up, let the grill cool completely and then brush thoroughly with a high-quality grill brush.

Note: Do not use a commercial cleaner on the cooking grid. For baked on residue use grill brush on the cooking grid and other components.

Burn Off

This process is much like that used in self-cleaning ovens and is most efficient when completed after each use of the grill.

⚠ CAUTION

Do not open the grill during the burn off process. Opening the grill during the burn off process may cause a sudden grease fire flare up that could burn your face and arms. Wait until the grill has cooled before opening.

1. Turn gas knob to HI. Close lid and allow the grill to burn for ten minutes, or until no smoke is present. Do not allow the grill to burn for more than 30 minutes.
2. Turn gas knob and supply to OFF and allow the grill to cool.
3. Wipe COOL grill with a damp cloth to remove soot.

Grill Bottom

Periodically remove cooking grids to clean the interior of the grill. Scrape off baked on residue with a putty knife or brush and rinse with water. Clean the bottom air holes with a small knife.

Burner Maintenance

Stainless steel burners often turn reddish brown after use. This does not effect the performance of the grill. When cleaning the interior of the grill, remove the burners and clean with a brush. Wash with water and a mild detergent.

Grease Cup

Empty periodically.

Venturi Tubes

The venturi tubes allow air and gas to mix prior to burning, ensuring an efficient flame. Spiders or other small insects may build webs or nests inside the tubes obstructing air flow. This can cause a fire, or flashback, around the obstructed venturi tubes and may damage to components beneath the grill or an unsafe condition. To reduce risk, inspect and clean the venturi tubes at least twice monthly when spiders are active. If the grill has been unused for an extended period of time inspect the tubes before using the grill.

Cleaning Venturi Tubes

1. Remove the cooking grids and briquette rack.
2. Remove the burner from the grill.
3. Lay the burner face down and remove the four retaining screws from the venturi tube plate and the burner. **See Figure Below.**
4. Use a small flexible brush to remove any debris for the tube(s).
5. Flush with water.
6. Allow the tube(s) to dry before reinstalling.
7. Reattach the venturi, collector box, and bracket in the same order removed.
8. Reinstall burner, briquette rack, and cooking grids.

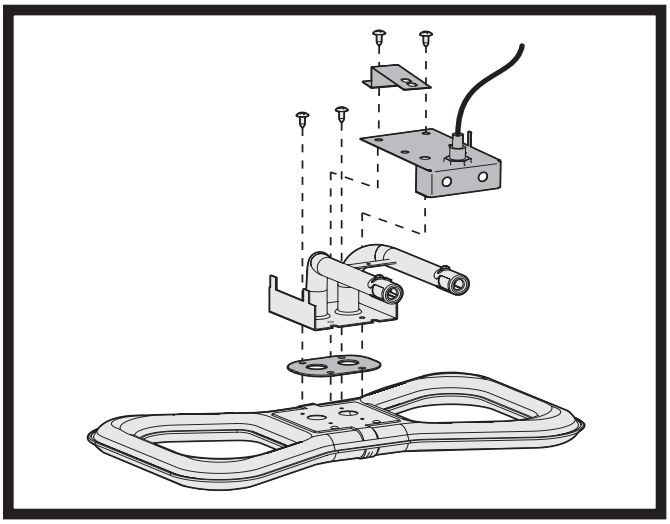

CLEANING VENTURI TUBES

Exterior Cleaning

Turn off the grill and allow it to cool before cleaning. Never use aerosol sprays or flammable cleaners on or near a hot grill.

Do not use abrasive pads or cleaners on stainless or painted components.

Clean the grill exterior regularly with a solution of mild detergent and hot water.

Touch-up paint is available from your dealer.

Broilmaster protective covers are recommended. Clean stainless steel components with a stainless steel cleaner available in most hardware stores.

Briquettes and Flare Busters

If the briquettes did not come clean during burn off, wait for the grill to cool and then turn them over. The residue will burn off during the next warm-up.

TROUBLESHOOTING

Although we have attempted to ensure that your grill will operate properly and satisfactorily, sometimes problems do arise. The following troubleshooting guide lists several possible problems and their probable cause and solution.
Do not repair or replace any part of the grill unless specifically recommended in this manual.
All other service should be referred to a qualified technician.

Problem	Cause	Solution
Burner will not light.	Gas injector not inserted in venturi tube.	Realign/engage gas injector with the venturi tube.
	Clogged gas injector.	Remove gas injector from gas control assembly and clean.
	Obstruction in gas line.	For propane models, ensure gas valve on cylinder is OFF. Remove flexible hose and blow out any debris.
	Spider webs in venturi tubes.	Clean venturi tubes. See Maintenance Section.
	Misalignment of collector box and burner.	Position electrode properly. Clean collector box.
	Out of gas	Refill LP gas cylinder. If natural model, turn on gas at source.
	Dead battery.	Replace with AA Alkaline battery.
Inadequate grill temperature.	Poor combustion.	Adjust air shutter.
	Misalignment of venturi tube and gas injector.	Realign/engage gas injector with the venturi tube.
	Inadequate gas pressure.	Contact gas supplier for assistance.
	Incorrect orifice/valve setting.	Refer to gas conversion instructions in this manual.
Flames blow out.	Cold grill.	Preheat grill at least 5 minutes on HI with the grill lid closed.
	Misalignment of burner tube and gas injector.	Realign/engage gas injector with the burner tube.
	Poor combustion.	Adjust air shutter.
	Extreme wind.	Turn or shield grill.
Yellow flames.	Air shutter improperly set.	Open air shutter
	Spider webs in venturi tubes.	Clean venturi tubes. See Maintenance Section.
	Seasoning salts on burner.	Clean by washing burner with mild detergent.
	Oil film on burner.	Allow burner to operate on HI for 10-15 minutes.

IMPORTANT SAFETY INFORMATION

⚠ WARNING

Spiders and insects can nest in gas grill burners causing the gas to flow from the front of the burner and ignite under the control panel. This is very dangerous and can damage the grill, making it unsafe to operate. Inspect the grill at least twice per year and more often when spiders are active.

Be sure all grill controls are turned off and the grill is cool before using any type of aerosol cleaner on or around the grill. The chemical that produces the spraying action could, in the presence of heat, ignite or cause metal parts to corrode. Do not operate the grill under unprotected combustible construction. Use only in well ventilated areas. Do not use in buildings, garages, sheds, breezeways or any enclosed areas.

Keep the area around the grill free from combustible materials, trash, or combustible fluids and vapors such as gasoline or charcoal lighter fluid. Do not obstruct the flow of combustion and ventilation air. Keep the back of the cart free and clear from debris.

If the grill is stored indoors ensure that it is cool. If propane is used, the cylinder must be unhooked and the propane cylinder stored outside in a well-ventilated area, out of reach of children.

Never use the grill in windy conditions. If located in a consistently windy area (oceanfront, mountain top, etc.) a windbreak will be required.

Always adhere to the specified clearance.

Keep electrical cords always from the heated areas of the grill.

Do not use the grill for cooking excessively fatty meats or products, which promote flare-ups.

Keep Children Away from the Grill at All Times

Never leave children unattended near the grill. Teach them to stay away even when you are not cooking, as the grill can remain hot after it is turned off.

Never allow children to sit, stand or play on or around the grill at any time. Do not store items of interest to children around or below the grill or in the cart.

Never allow children to crawl inside of a cart or island enclosure.

IMPORTANT SAFETY INFORMATION

Practice Safe Grilling

Do not wear loose fitting clothing or readily flammable clothing (such as synthetics) around the grill. Never let clothing, pot holders, or other flammable materials come in contact with or too close to any grate, burner or hot surface. Fabric may ignite and result in personal injury.

Use only dry pot holders. Using a damp pot holder on a hot surface may cause burns from steam. Do not use towels or bulky cloth in place of pot holders. Do not let pot holders touch hot cooking grids. Never use a sponge on a hot surface, as it may cause steam burns.
Protect your hand with an oven mitt or pot holder when opening the grill lid. Never lean over an open grill.

Use heat-proof cookware and tools specifically designed for grilling. Other types of material may shatter with sudden temperature changes or melt from extreme heat. Use tools with insulated handles and keep them away from the grill to avoid heat build-up.

Do not spray aerosol oil or butter or pour liquid oil into the grill. Doing so will cause a flash fire that can burn you.

Grease is flammable. Let grease cool before attempting to handle it. Avoid letting grease deposits collect in the bottom of the grill. Clean your grill often.

Do not use aluminum foil to line the cooking grids or grill bottom. This can disrupt combustion air flow or trap excess heat in the control area. Excess heat can melt knobs or igniters, and increase the chance of personal injury. The drip tray accessory may be lined with aluminum foil.

Do not heat unopened food containers - such as cans, jars, and sealed pans. Pressure build-up may cause the container to burst.

When lighting a grill, always open the lid first and pay close attention to what you are doing. Turn one burner knob to HI, press the igniter button and count to five.

For proper lighting and performance of the burners keep the ports clean.

Clean the grill with caution. Avoid steam burns; do not use a wet sponge or cloth to clean the grill while it is hot. Some cleaners produce noxious fumes or can ignite if applied to a hot surface.

Cook Food To Proper Temperatures

Cooking food safely requires that you raise the internal temperature of the meat high enough and for a long enough period of time to kill any food-borne bacteria that may cause illnesses.

Color is not the best indicator that food is safe to eat. Use a high-quality probe thermometer to be sure your food is properly cooked. Place the tip of an instant-read thermometer into the center of the thickest part of the food but at least 1/2 inch deep. Read the temperature after about 10 seconds. Follow the temperature guidelines for the type of food you're cooking.

The following guidelines are from the U.S. Food and Drug Administration Center for Food Safety and Applied Nutrition.

Cook to Internal Temp			
Meat & Poultry	**Medium Rare**	**Medium**	**Well Done**
Fresh Beef - Medium Rare	145°F	160°F	170°F
Ground turkey, chicken	165°F		
Ground veal, beef, lamb, pork	145°F with 3 minutes of rest and then turn		
Fresh Pork - Medium		160°F	170°F
Chicken - whole	165°F		
Turkey - whole	165°F		
Poultry breasts, roast	165°F		
Poultry thighs, wings	165°F		
Stuffing (cooked alone or in bird)	165°F		
Duck and goose	180°F		
Fresh Veal - Medium Rare	160°F		
Fresh Lamb - Medium Rare	145°F	160°F	170°F
Ham - fresh (raw)	145°F	160°F	170°F
Ham - pre-cooked (reheat)	140°F		
Seafood			
Fish	Cook until flesh turns opaque and flakes easily with a fork.		
Shrimp, lobster, crab	Cook until shells turn red and flesh becomes pearly opaque.		
Scallops	Should turn milky white or opaque and firm.		
Clams, mussels, oysters	Cook until shells open.		

*The above temperature settings are a guide, the temperatures may vary due to wind and outside ambient temperatures.

WARRANTY TERMS

Empire Comfort Systems Inc. warranties this Broilmaster premium gas grill to be free from defects at the time of purchase and for the periods specified below. Broilmaster Premium Gas Grills must be installed by a qualified technician and must be maintained and operated safely, in accordance with the instructions in the owner's manual. This warranty applies to the original purchaser only and is not transferable. All warranty repairs must be accomplished by a qualified gas appliance technician.

Limited Lifetime Parts Warranty – Against Rust-Through

If the items listed below fail because of defective workmanship or material, Empire will repair or replace at Empire's option. The limited lifetime warranty provides one-time replacement of a covered component.

- Aluminum Grill Housing (except paint)
- Stainless Steel Cooking Grids and Stainless Steel Griddles
- Select Stainless Steel Components – Cart, Mounting, Bowtie Burner, Side Burner (DPSBSS), Side Burner Housing, and Warming Rack
- Stainless Steel Built-In Components – Built-In Kits for 3-Series Grill Heads, Door Kit, Tilt-Out LP Tank Door, and Vent Register Kit

Limited Ten-Year Parts Warranty – Against Rust-Through

If the items listed below fail because of defective workmanship or material, Empire will repair or replace at Empire's option.

- Stainless Steel Burners for H-Series, Q-Series, and R3B
- Stainless Steel Drip Pan for Q-Series
- Side Burner (DPASBC), Side Burner Housing (BSA)

Limited Five-Year Parts Warranty – Against Rust-Through

If the items listed below fail because of defective workmanship or material, Empire will repair or replace at Empire's option.

- Infrared Burners on R3 or R3B
- Flare Buster™ Ceramic Flavor Enhancers
- Painted Electro-Galvanized Steel Components
- Stainless Steel Smoker Shutter

Limited Two-Year Parts Warranty – Against Rust-Through

If the items listed below fail because of defective workmanship or material, Empire will repair or replace at Empire's option.

- Porcelain Coated Steel Briquette Racks
- Chrome-Plated Warming Rack
- Stainless Steel Flavor Screen
- Stainless Steel Heat Shield

Limited One-Year Parts Warranty

If the items listed below fail because of defective workmanship or material, Empire will repair or replace at Empire's option.

- Valves, knobs, ignitors, labels, hoses, fittings, grease cups, drip buckets, and all other parts and accessories – including those made from stainless steel – unless specified above
- Paint on Aluminum Grill Head

Duties of the Owner

The appliance must be installed by a qualified installer and operated in accordance with the instructions furnished with the appliance.

A bill of sale, cancelled check, or payment record should be kept to verify purchase date and establish warranty period.

Ready access to the appliance for service.

What Is Not Covered

- Damages that might result from the use, misuse, or improper installation or storage of this appliance.
- Travel, diagnostic costs and freight charges on warranted parts to and from the factory.
- Claims that do not involve defective workmanship or materials.
- Unauthorized service or parts replacements.
- Removal and reinstallation cost.
- Inoperable due to improper or lack of maintenance.
- The costs of a service call to diagnose a problem and labor for replacement or repairs.
-

How To Get Service

To make a claim under this warranty, please have your receipt available and contact your installing dealer. Provide the dealer with the model number, serial number, type of gas, and purchase verification. The installing dealer is responsible for providing service and will contact the factory to initiate any warranted parts replacements. Empire will make replacement parts available at the factory. Shipping expenses are not covered.

If, after contacting your Empire dealer, service received has not been satisfactory, contact: Consumer Relations Department, Empire Comfort Systems Inc., PO Box 529, Belleville, Illinois 62222, or send an e-mail to info@empirecomfort.com with "Consumer Relations" in the subject line.

Your Rights Under State Law

This warranty gives your specific legal rights, and you may also have other rights, which vary from state to state.

MASTER PARTS DISTRIBUTOR LIST

To order parts under warranty, please contact your local Broilmaster dealer. See the dealer locator at www.broilmaster.com.

To provide warranty service, your dealer will need your name and address, purchase date and serial number, and the nature of the problem. Please keep your receipt to establish ownership and date of purchase.

To order parts after the warranty period, please contact your dealer or one of the Master Parts Distributors listed below.

The Master Parts Distributor list changes from time to time. For the current list go to www.broilmaster.com and click on the Parts button.

Note: Master Parts Distributors are independent businesses that stock the most commonly ordered repair parts.

Dey Distributing
1401 Willow Lake Boulevard
Vadnais Heights, MN 55101

Phone: 651-490-9191
Toll Free: 800-397-1339
Website: www.deydistributing.com
Parts: Heater, Hearth and Grills

Victor Division of F. W. Webb Company
200 Locust Street
Hartford, CT 06114

Phone: 860-722-2433
Toll Free: 800-243-9360
Fax: 860-293-0479
Toll Free Fax: 800-274-2004
Websites: www.fwwebb.com & www.victormfg.com
Parts: Heater, Hearth and Grills

East Coast Energy Products
10 East Route 36
West Long Branch, NJ 07764

Phone: 732-870-8809
Toll Free: 800-755-8809
Fax: 732-870-8811
Website: www.eastcoastenergy.com
Parts: Heater, Hearth and Grills

Able Distributors
2501 North Central Avenue
Chicago, IL 60639

Phone: 773-889-5555
Toll Free: 800-880-2253
Fax: 773-466-1118
Website: www.abledistributors.com
Parts: Heater

HOW TO ORDER REPAIR PARTS

Parts Not Under Warranty

Parts can be ordered through your Service Person, Dealer, or a Master Parts Distributor. See this page for the Master Parts Distributors list. For best results, the **service person or dealer** should order parts through the distributor. Parts can be shipped directly to the **service person/dealer**.

Warranty Parts

Warranty parts will need a proof of purchase and can be ordered by your Service Person or Dealer. Proof of purchase is **required** for warranty parts.

All parts listed in the Parts List have a Part Number. When ordering parts, first obtain the Model Number and Serial Number from the name plate on your equipment. Then determine the Part Number (**not** the Index Number) and the Description of each part from the following illustration and part list. Be sure to give all this information . . .

Model Number / Dealer_____ Part Description _____

Serial Number / Dealer Phone Number_____ Part Number _____

Type of Gas (Propane or Natural) _____

Do not order bolts, screws, washers or nuts. They are standard hardware items and can be purchased at any local hardware store.

Shipments contingent upon strikes, fires and all causes beyond our control.

Your Broilmaster Premium Gas Grill is identified by model number, serial number, and gas type. This information is provided on a product identification label located on the grill's control panel. For your convenience, complete this section for future reference when contacting your dealer.

GRILL MAINTENANCE HISTORY

Date	Maintenance Performed

BROILMASTER
A Division of Empire Comfort Systems, Inc.
918 Freeburg Ave.
Belleville, Illinois 62220
Visit our web site at www.broilmaster.com
If you have a general question about our products, please e-mail us at info@empirecomfort.com.
If you have a service or repair question, please contact your dealer.